M.C.R.R.

DIMENSIONS AND CLASSIFICATION OF LOCOMOTIVES OF THE MICHIGAN CENTRAL RAILROAD

BOOK No 21

BOOK CORRECT TO DATE SHOWN BELOW

1934		1935		1936			1937			1938			1939		
JUNE 1	DEC 31	JUNE 30		JAN 1	JUNE 1	DEC 1			JUL 1						

GENERAL ARRANGEMENT OF PAGES

	Pages
Title	1
Explanation of Classification	4&5
Condensed Recapitulation by Classes	6-7
Numerical Index	8-13
List of Engines and General Data by Classes	
Recapitulation of Locomotives by Classes	~~I-IX~~ I-VI

Classification	Type	Symbol	Representation	Classification	Type	Symbol	Representation
Type A	Berkshire	2-8-4	◭○▭○○○○○○	Type NU	Mallet	0-8-8-0	◭▭○○○○▭○○○○
" B	6 Wh. Sw.	0-6-0	⌋▭○○○	"			◭
" C	American	4-4-0	◭○▭○○○	"			◭
" D	Forney	2-4-4	◭○▭○○○○	" O			◭
" E	Mogul	2-6-0	◭○▭○○○	" P			◭
" F	10 Wheeled	4-6-0	◭○▭○○○○	" Q			◭
" G	Consolidation	2-8-0	◭○▭○○○○	" R	Electric	0-4-4-0	⌋○○-○○⌊
" H	Mikado	2-8-2	◭○▭○○○○○	" S	"	4-8-4	◭○○○○○○○○
" I	Atlantic	4-4-2	◭○▭○○○○	" T	"	0-8-8-0	◭○○○○-○○○○
" J	Hudson	4-6-4	◭○▭○○○○○○	" U	8 Wh. Sw.	0-8-0	◭▭○○○○
" K	Pacific	4-6-2	◭○▭○○○○	" V			◭
" L	Mohawk	4-8-2	◭○▭○○○○○	" W			◭
" M	10 Wh. Sw.	0-10-0	⌋▭○○○○○	" X	12 Wheeled	4-8-0	◭○▭○○○○
" NB	Mallet	0-6-6-0	◭▭○○○▭○○○	" Y			◭
" NE	"	2-6-6-2	◭○▭○○○▭○○○○	" Z			◭

EXPLANATION

In the designation of classes the first or index letter, a one-inch letter as placed on cabs, indicates the wheel arrangement as given on the preceding page. All locomotives with the same wheel arrangement have the same letter beginning the class designation. Difference in design, size, etc., of locomotives with the same wheel arrangement is indicated by the number following the dash. A small letter following a class letter or number indicates that the locomotives are slightly different than those in the class represented by the letter and number preceding the small letters.

Thus:- in the class designation "K-80R" the "K" indicates a Pacific type locomotive, and the "80" indicates a particular design of this type of locomotive and the "R" ($\frac{1}{2}$ the size of the "K" and the "80") indicates that the locomotives in this class are slightly different from the locomotives in the class "K-80N." Similarly locomotives in classes "K-80K", "K-80L" and "K-80M" are slightly different from each other, although all three classes are alike in general.

M.C.R.R.

| CLASSES | NUMBER OF LOCOMOTIVES-CONDENSED RECAPITULATION THE MICHIGAN CENTRAL RAILROAD CO. | | |

CONDENSED RECAPITULATION BY CLASSES

CLASSES	NUMBER OF LOCOMOTIVES	TYPE	SERVICE	MAXIMUM TRACTIVE FORCE	CYLINDERS	DIAM. OF DRIVERS	BOILER PRES.	WEIGHT ON DRIVERS
B-10 F, N, R, W, X.	42.	6-Wh. Swch.	Switching	33140	21 x 28	57	180	168000 *
B-11 A, B, C, E, G.	49.	"	"	33140	21 x 28	57	180	172500 *
DEs-3	4.	Diesel Electr.	Frt. and Pass.	63575		44		254300
F-82 Sub Classes	10.	10 Wheeled	" "	26670 *	19½ x 26	63	200 *	121000 *
G-6 J, M, O, P, T, U.	54.	Consolidation	Freight	45700	23 x 32	63	200	216500 *
H-7 A, B, C, D, E.	70.	Mikado	"	59000	27 x 30	63	200 *	247300 *
H-10, A, B.	77.	"	"	63470	28 x 30	63	200	248000 *
J-1 B, C, D.	30.	Hudson	Passenger	42360	25 x 28	79	225	188000 *
K-3 F, H, I, M, P, Q.	50.	Pacific	"	30900	23½ x 26	79	200	194500 *
M-1 A, D, E, F.	4.	10-Wh. Swch.	Switching	56450	24 x 28	51	210	277000 *
R-1, R-1 A, B.	12.	Electric	"	60000 *		48		240000 *
U-2 A, B, C, E, G.	48.	8-Wh. Swch.	"	45700	23½ x 30	57	185	216500 *
U-3 Sub Classes	46.	"	"	52920 *	25 x 28	52 *	185 *	222500 *

* Maximum of group see separate sheet for individual values

N.Y.C. SYSTEM LOCOMOTIVES CLASSIFIED AS RENUMBERED 1936		
CLASS	NEW LOCO. NOS	TYPE
B	6600 – 7087	6 WHEEL SWITCH
C	4302 – 4307	AMERICAN
DES	505 – 566	DIESEL
E	1900 – 1929	MOGUL
F	800 – 889	10 WHEELED
G	904 – 1199	CONSOLIDATED
H H-5	1202 – 1649	MIKADO
H-6	1700 – 1894	
H-7	1950 – 2069	
H-10	2080 – 2399	
I	4320 – 4324	
J	5200 – 5404	HUDSON
K K-14	4390 – 4399	PACIFIC
K-11	4401 – 4599	
K-3	4603 – 4899	
K-5	4905 – 4940	
L L-1	2500 – 2683	MOHAWK
L-2	2700 – 2999	
M	7190 – 7198	10 WHEEL SWITCH
N	1933 – 1948 7097 – 7109	MALLET
P	200 – 221	
Q	150 – 156	ELECTRIC
R	160 – 171 300 – 343	ELECTRIC
S	100 – 146	ELECTRIC
T	247 – 282	ELECTRIC
U	7200 – 7994	8 WHEEL SWITCH

LOCO'S EQUIP'T WITH FEED WATER HEATERS					
CLASS	LOCO. NUMBER	MAKE	CLASS	LOCO. NUMBER	MAKE
H-7 C.	2000	ELESCO	H-7 B.	2046 +	ELESCO
"	2001	"	"	2047	"
"	2002	"	"	2048 +	"
"	2004 +	"	H-7 A.	2052 +	"
"	2005	"	"	2053 +	"
"	2007 +	"	"	2054 +	"
"	2009	"	"	2057	"
"	2010	"	"	2058 +	"
"	2012	"	"	2059	"
"	2013 +	"	H-10 A.	2218	"
"	2014 +	"	"	2219	"
"	2015	"	"	2221	"
"	2016 +	"	"	2222	"
"	2017 +	"	"	2223	"
"	2019	"	"	2225	"
"	2020	"	"	2226	"
"	2022 +	"	"	2228	"
"	2023	"	"	2229	"
H-7 D.	2026 +	"	"	2230	"
"	2027	"	"	2231	"
"	2029	"	"	2232	"
"	2030 +	"	H-10 B.	2337	"
"	2032 +	"	"	2338	"
"	2033	"	"	2340	"
"	2034 +	"	"	2341	"
H-7 B.	2035	"	"	2342	"
"	2036 +	"	"	2343	"
"	2037	"	"	2344	"
"	2038	"	"	2345	"
"	2039	"	"	2346	"
"	2040	"	"	2347	"
"	2041	"	"	2348	"
"	2042 +	"	"	2349	"
"	2043 +	"	"	2350	"
"	2044 +	"	"	2351	"
"	2045	"	"	2360	"
+ INDICATES LOCO'S IN CANADA					

LOCO'S EQUIP'T WITH FEED WATER HEATERS					
CLASS	LOCO. NUMBER	MAKE	CLASS	LOCO. NUMBER	MAKE
H-10 B	2363	ELESCO	J-1 B	5345	ELESCO
"	2365	"	"	5346	"
"	2367	"	"	5347	"
"	2368	"	"	5348	"
"	2372	"	"	5349	"
"	2373	"	"	5350	COFFIN
"	2374	"	"	5351	"
"	2375	"	"	5352	"
"	2376	"	"	5353	"
"	2377	"	"	5354	"
"	2379	COFFIN	J-1 C	5355	"
"	2380	ELESCO	"	5356	"
"	2381	"	"	5357	"
"	2383	"	"	5358	"
"	2384	"	"	5359	"
"	2387	"	J-1 D	5360 +	ELESCO
"	2388	"	"	5361 +	"
"	2390	"	"	5362 +	"
"	2391	"	"	5363 +	"
"	2392	"	"	5364 +	"
"	2393	"	"	5365 +	"
"	2394	"	"	5366 +	"
"	2395	"	"	5367	"
"	2396	"	"	5368	"
"	2398	"	"	5369	"
"	2399	"	"	5370 +	"
"	2081	"	"	5371 +	"
"	2083	"	"	5372 +	"
"	2084	"	"	5373 +	"
"	2085	"	"	5374 +	"
"	2086	"			
"	2087	"			
"	2088	"			
"	2089	"			

+ INDICATES LOCO'S IN CANADA

ENGINE No.	DIV.	"B K" STOKER	DUPLEX STOKER	TYPE "B" STOKER	BOOSTER	FEED WATER HEATER
2000	U.S.	YES				YES
1	U.S.		YES		YES	YES
2	U.S.	YES			YES	YES
2004	CAN.	YES				YES
5	U.S.	YES				YES
6	U.S.				YES	
2007	CAN.	YES				YES
9	U.S.		YES		YES	YES
10	U.S.		YES		YES	YES
2012	U.S.		YES		YES	YES
13	CAN.	YES				YES
14	CAN.	YES				YES
2015	U.S.	YES				YES
16	CAN.	YES				YES
17	CAN.	YES				YES
2019	U.S.		YES		YES	YES
20	U.S.		YES		YES	YES
21	U.S.				YES	
2022	CAN.	YES				YES
23	U.S.		YES		YES	YES
26	CAN.	YES				YES
2027	U.S.	YES				YES
29	U.S.		YES		YES	YES
30	CAN.	YES				YES
2032	CAN.	YES				YES
33	U.S.	YES				YES
34	CAN.	YES				YES
2035	U.S.		YES		YES	YES
36	CAN.	YES				YES
37	U.S.		YES		YES	YES
2038	U.S.		YES		YES	YES
39	U.S.		YES		YES	YES
40	U.S.		YES		YES	YES
2041	U.S.		YES		YES	YES
42	CAN.	YES				YES
43	CAN.			YES		YES
2044	CAN.	YES				YES
45	U.S.		YES		YES	YES
46	CAN.	YES				YES
2047	U.S.		YES		YES	YES
48	CAN.	YES				YES
52	CAN.	YES				YES
2053	CAN.	YES				YES
54	CAN.	YES				YES
57	U.S.	YES				YES
2058	CAN.	YES				YES
59	U.S.	YES				YES
2060						
TO 2069	U.S.		YES			

GENERAL NUMERICAL LIST

Note:-

Small letters in column following the locomotive number indicates the following:

C — Locomotives in Canada.

D — Electric locomotives, Detroit River Tunnel.

T — Trust Equipment locomotives.

TC - Trust Equipment locomotives in Canada.

The absence of a letter indicates locomotives in United States.

GENERAL NUMERICAL LIST

ENGINE No.	CLASS		ENGINE No.	CLASS		ENGINE No.	CLASS		ENGINE No.	CLASS		ENGINE No.	CLASS		ENGINE No.	CLASS		ENGINE No.	CLASS	
160	R1	D				955	G-6 J		985			1015			1045			1075		
161	R1	D				956			986			1016	G-6 M		1046	G-6 P	C	1076		
162	R1	D				957	G-6 J		987	G-6 O		1017	G-6 M		1047	G-6 P	C	1077	G-6 U	C
163	R1	D				958	G-6 J	C	988	G-6 O		1018	G-6 M		1048	G-6 T		1078		
164	R1	D				959			989			1019			1049			1079		
165	R1	D	880	F-82	C	960	G-6 J	C	990			1020	G-6 M		1050					
166	R1A	D	881	F-82	C	961			991			1021	G-6 M		1051					
167	R1A	D	882	F-82 B		962	G-6 J	C	992			1022			1052	G-6 T				
168	R1A	D	883	F-82 B		963			993	G-6 O		1023			1053	G-6 T				
169	R1A	D	884	F-82 B		964	G-6 J	C	994	G-6 O		1024	G-6 M		1054	G-6 T				
170	R1B	D	~~885~~	~~F-82 C~~		965			995	G-6 O		1025			1055					
171	R1B	D	886	F-82 C		966	G-6 J	C	996	G-6 O		1026			1056					
172			887	F-82 C		967			997	G-6 O		1027			1057					
173			888	F-82 D		968			998			1028	G-6 M		1058					
174			889	F-82 D		969			999			1029	G-6 M		1059	G-6 T				
						970			1000			1030	G-6 M		1060	G-6 T				
						971	G-6 J	C	1001			1031	G-6 M		1061	G-6 T				
						972			1002			1032	G-6 M		1062	G-6 T				
						973			1003			1033			1063	G-6 T				
						974			1004			1034			1064					
						975			1005			1035			1065	G-6 T				
						976			1006			1036			1066	G-6 T				
						977			1007			1037			1067	G-6 T				
563	DES-3	T				978			1008			1038			1068					
564	DES-3	T				979	G-6 O		1009	G-6 M		1039			1069					
565	DES-3	T				980			1010	G-6 M		1040			1070					
566	DES-3	T				981			1011	G-6 M		1041	G-6 P	C	1071					
						982	G-6 O		1012	G-6 M		1042	G-6 P	C	1072	G-6 U	C			
						983	G-6 O		1013	G-6 M		1043			1073	G-6 U	C			
						984			1014	G-6 M		1044			1074					

ENGINE No	CLASS		ENGINE No	CLASS		ENGINE No	CLASS		ENGINE No	CLASS		ENGINE No	CLASS		ENGINE No	CLASS		ENGINE No	CLASS	
			2000	H-7 C		2030	H-7 D	C	2060	H-7 E		2090	H-10					2200		
			2001	H-7 C		2031	H-7 D	C	2061	H-7 E		2091						2201		
			2002	H-7 C		2032	H-7 D	C	2062	H-7 E		2092						2202		
			2003	H-7 C	C	2033	H-7 D		2063	H-7 E		2093						2203		
			2004	H-7 C	C	2034	H-7 D	C	2064	H-7 E		2094						2204		
			2005	H-7 C		2035	H-7 B		2065	H-7 E		2095						2205		
			2006	H-7 C		2036	H-7 B	C	2066	H-7 E		2096						2206		
			2007	H-7 C	C	2037	H-7 B		2067	H-7 E		2097			2150	H-10 A	T	2207		
			2008	H-7 C		2038	H-7 B		2068	H-7 E		2098						2208		
			2009	H-7 C		2039	H-7 B		2069	H-7 E		2099						2209		
			2010	H-7 C		2040	H-7 B		2070									2210		
			2011	H-7 C		2041	H-7 B		2071									2211		
			2012	H-7 C		2042	H-7 B	C	2072									2212		
			2013	H-7 C	C	2043	H-7 B	C	2073									2213		
			2014	H-7 C	C	2044	H-7 B	C	2074									2214		
			2015	H-7 C		2045	H-7 B		2075									2215		
			2016	H-7 C	C	2046	H-7 B	C	2076									2216		
			2017	H-7 C	C	2047	H-7 B		2077						2167	H-10 A	T	2217		
			2018	H-7 C	C	2048	H-7 B	C	2078									2218	H-10 A	T
			2019	H-7 C		2049	H-7 B	C	2079									2219	H-10 A	T
			2020	H-7 C		2050	H-7 A	C	2080			2120	H-10 A	T				2220	H-10 A	T
			2021	H-7 C		2051	H-7 A	C	2081	H-10 B	T							2221	H-10 A	T
			2022	H-7 C	C	2052	H-7 A	C	2082									2222	H-10 A	T
			2023	H-7 C		2053	H-7 A	C	2083	H-10 B	T							2223	H-10 A	T
			2024	H-7 C		2054	H-7 A	C	2084	H-10 B	T							2224	H-10 A	T
			2025	H-7 D		2055	H-7 A	C	2085	H-10 B	T	2125	H-10 A	T				2225	H-10 A	T
			2026	H-7 D	C	2056	H-7 A		2086	H-10 B	T							2226	H-10 A	T
			2027	H-7 D		2057	H-7 A		2087	H-10 B	T							2227	H-10 A	T
			2028	H-7 D		2058	H-7 A	C	2088	H-10 B	T							2228	H-10 A	T
			2029	H-7 D		2059	H-7 A		2089	H-10 B	T							2229	H-10 A	T

GENERAL NUMERICAL LIST

ENGINE No	CLASS		ENGINE No	CLASS		ENGINE No	CLASS		ENGINE No	CLASS		ENGINE No	CLASS		ENGINE No	CLASS		ENGINE No	CLASS	
2230	H-10 A	T	2260	H-10 A	T	2290			2320			2350	H-10 B	T	2380	H-10 B	T			
2231	H-10 A	T	2261			2291			2321			2351	H-10 B	T	2381	H-10 B	T			
2232	H-10 A	T	2262			2292			2322			2352			2382					
2233			2263			2293			2323			2353			2383	H-10 B	T			
2234			2264			2294			2324			2354			2384	H-10 B	T			
2235			2265			2295			2325	H-10 B	T	2355			2385					
2236			2266			2296			2326			2356			2386					
2237			2267			2297			2327			2357			2387	H-10 B	T			
2238			2268			2298			2328			2358			2388	H-10 B	T			
2239			2269	H-10 A	T	2299			2329			2359			2389					
2240			2270			2300			2330			2360	H-10 B	T	2390	H-10 B	T			
2241	H-10 A	T	2271			2301			2331			2361			2391	H-10 B	T			
2242			2272			2302			2332			2362			2392	H-10 B	T			
2243			2273			2303			2333			2363	H-10 B	T	2393	H-10 B	T			
2244			2274			2304			2334			2364			2394	H-10 B	T			
2245			2275	H-10 A	T	2305			2335			2365	H-10 B	T	2395	H-10 B	T			
2246			2276			2306			2336			2366			2396	H-10 B	T			
2247			2277			2307			2337	H-10 B	T	2367	H-10 B	T	2397					
2248			2278			2308			2338	H-10 B	T	2368	H-10 B	T	2398	H-10 B	T			
2249			2279	H-10 A	T	2309			2339	H-10 B	T	2369			2399	H-10 B	T			
2250			2280			2310			2340	H-10 B	T	2370								
2251			2281			2311			2341	H-10 B	T	2371								
2252			2282			2312			2342	H-10 B	T	2372	H-10 B	T						
2253	H-10 A	T	2283			2313			2343	H-10 B	T	2373	H-10 B	T						
2254			2284			2314			2344	H-10 B	T	2374	H-10 B	T						
2255			2285			2315			2345	H-10 B	T	2375	H-10 B	T						
2256			2286			2316			2346	H-10 B	T	2376	H-10 B	T						
2257			2287			2317			2347	H-10 B	T	2377	H-10 B	T						
2258			2288			2318			2348	H-10 B	T	2378								
2259			2289			2319			2349	H-10 B	T	2379	H-10 B	T						

ENGINE No	CLASS		ENGINE No	CLASS		ENGINE No	CLASS		ENGINE No	CLASS		ENGINE No	CLASS		ENGINE No	CLASS		ENGINE No	CLASS	
4600			4630	K-3 P		4670			4700	K-3 P	T							5370	J-1 D	TC
4601			4631	K-3 P		4671			4701									5371	J-1 D	TC
4602			4632	K-3 P		4672			4702									5372	J-1 D	TC
4603	K-3 F		4633	K-3 P		4673			4703									5373	J-1 D	TC
4604	K-3 F		4634	K-3 P		4674			4704									5374	J-1 D	TC
4605			4635	K-3 Q	T	4675			4705						5345	J-1 B				
4606			4636	K-3 Q	T	4676			4706						5346	J-1 B				
4607	K-3 F		4637	K-3 Q	T	4677	K-3 Q	T	4707	K-3 P	T				5347	J-1 B				
4608	K-3 H		4638	K-3 Q	T	4678	K-3 Q	T	4708						5348	J-1 B				
4609	K-3 H		4639	K-3 Q	T	4679			4709						5349	J-1 B				
4610			4640	K-3 H	C	4680			4710			4880			5350	J-1 B				
4611	K-3 I		4641	K-3 H	C	4681	K-3 Q	T	4711	K-3 P	T	4881	K-3 P	T	5351	J-1 B				
4612	K-3 I		4642	K-3 H	C	4682			4712			4882			5352	J-1 B				
4613	K-3 I		4643	K-3 H	C	4683			4713			4883			5353	J-1 B				
4614	K-3 I		4644	K-3 H	C	4684			4714			4884	K-3 P	T	5354	J-1 B				
4615	K-3 M		4645			4685						4885			5355	J-1 C	T			
4616	K-3 M					4686						4886			5356	J-1 C	T			
4617	K-3 M					4687						4887			5357	J-1 C	T			
4618	K-3 M					4688						4888	K-3 Q	T	5358	J-1 C	T			
4619	K-3 M					4689						4889			5359	J-1 C	T			
4620	K-3 M					4690									5360	J-1 D	TC			
4621	K-3 M					4691									5361	J-1 D	TC			
4622	K-3 M					4692	K-3 Q	T							5362	J-1 D	TC			
4623	K-3 M					4693									5363	J-1 D	TC			
4624	K-3 M					4694									5364	J-1 D	TC			
4625	K-3 P		4665			4695									5365	J-1 D	TC			
4626	K-3 P		4666			4696									5366	J-1 D	TC			
4627	K-3 P		4667			4697									5367	J-1 D	T			
4628	K-3 P		4668	K-3 Q	T	4698									5368	J-1 D	T			
4629	K-3 P		4669			4699									5369	J-1 D	T			

ENGINE No	CLASS		ENGINE No	CLASS		ENGINE No	CLASS		ENGINE No	CLASS		ENGINE No	CLASS		ENGINE No	CLASS		ENGINE No	CLASS	
6850			6880	B-10 W		6910	B-11 C		6940	B-11 G		6970			7190	M-1 D	C			
6851			6881	B-10 W		6911	B-11 C		6941	B-11 G		6971			7191	M-1 E	C			
6852	B-10 F		6882	B-10 W		6912	B-11 C		6942	B 11 G		6972			7192	M-1 A	C			
6853			6883	B-10 W		6913	B-11 C		6943	B-11 G		6973			7193					
6854			6884	B-10 W		6914	B-11 C		6944	B-11 G		6974			7194					
6855			6885	B-10 W		6915	B-11 C		6945			6975			7195					
6856			6886	B-10 W		6916	B-11 C		6946			6976			7196					
6857	B-10 F		6887	B-10 W		6917	B-11 C		6947			6977			7197			7407	U-2 B	
6858			6888	B-10 W		6918	B-11 C		6948			6978			7198	M-1 F		7408	U-2 B	
6859			6889	B-10 W		6919	B-11 C		6949			6979			7199			7409	U-2 B	
6860			6890	B-10 W		6920	B-11 E		6950			6980								
6861	B-10 N		6891	B-10 W		6921	B-11 E		6951			6981								
6862	B-10 N		6892	B-10 W		6922	B-11 E		6952			6982								
6863	B-10 N		6893	B-10 W		6923	B-11 E		6953			6983								
6864	B-10 N		6894	B-10 W		6924	B-11 E		6954			6984								
6865	B-10 N		6895	B-10 W		6925	B-11 E		6955			6985						7470	U-2 A	
6866			6896	B-10 W		6926	B-11 E		6956			6986						7471	U-2 A	
6867	B-10 N		6897	B-10 W		6927	B-11 E		6957			6987						7472	U-2 A	
6868	B-10 N		6898	B-11 A		6928	B-11 E		6958			6988						7473	U-2 A	
6869	B-10 N		6899	B-11 A		6929	B-11 E		6959			6989						7474	U-2 A	
6870	B-10 N		6900	B-11 A		6930	B-11 E		6960			6990			7380	U-2 D				
6871	B-10 N		6901	B-11 A		6931	B-11 E		6961			6991	B-10 N	C						
6872	B-10 N		6902	B-11 A		6932	B-11 E		6962			6992	B-10 X	C						
6873	B-10 R		6903	B-11 A		6933	B-11 E		6963			6993	B-10 X	C						
6874	B-10 R		6904	B-11 A		6934	B-11 E		6964			6994	B-10 X	C						
6875			6905			6935	B-11 G		6965			6995	B-10 X	C						
6876	B-10 R		6906	B-11 A		6936	B-11 G		6966			6996								
6877	B-10 R		6907	B-11 A		6937	B-11 G		6967			6997	B-11 B	C						
6878	B-10 W		6908	B-11 A		6938	B-11 G		6968			6998	B-11 B	C						
6879	B-10 W		6909	B-11 A		6939	B-11 G		6969			6999	B-11 B	C						

GENERAL NUMERICAL LIST

ENGINE No	CLASS		ENGINE No	CLASS		ENGINE No	CLASS		ENGINE No	CLASS		ENGINE No	CLASS		ENGINE No	CLASS		ENGINE No	CLASS	
7500			7530	U-2 G					7840	U-3 A		7870	U-3 E	T						
7501			7531	U-2 G					7841	U-3 A		7871	U-3 E	T						
7502			7532	U-2 G					7842	U-3 A		7872	U-3 E	T						
7503			7533	U-2 G					7843	U-3 A		7873	U-3 E	T						
7504	U-2 C		7534	U-2 G					7844	U-3 A		7874	U-3 E	T						
7505	U-2 C		7535	U-2 G					7845	U-3 A		7875	U-3 E	T						
7506	U-2 C		7536	U-2 G					7846	U-3 A		7876	U-3 H							
7507	U-2 C		7537	U-2 G					7847	U-3 A		7877	U-3 H							
7508	U-2 C		7538	U-2 G					7848	U-3 A		7878	U-3 H							
7509	U-2 C		7539	U-2 G					7849	U-3 A		7879	U-3 H							
7510	U-2 E		7540						7850	U-3 B		7880	U-3 H							
7511	U-2 E		7541						7851	U-3 B		7881	U-3 H							
7512	U-2 E		7542						7852	U-3 B		7882	U-3 H							
7513	U-2 E		7543						7853	U-3 B		7883	U-3 H							
7514	U-2 E		7544						7854	U-3 B		7884	U-3 H							
7515	U-2 E		7545						7855	U-3 B		7885	U-3 H							
7516	U-2 E		7546						7856	U-3 C	T	7886								
7517	U-2 E		7547						7857	U-3 C	T	7887								
7518	U-2 E		7548						7858	U-3 C	T	7888								
7519	U-2 E		7549						7859	U-3 C	T	7889								
7520	U-2 E		7550	U-2 C	C				7860	U-3 C	T									
7521	U-2 E		7551	U-2 C	C				7861	U-3 C	T									
7522	U-2 E		7552	U-2 C	C				7862	U-3 C	T									
7523	U-2 E		7553	U-2 C	C				7863	U-3 C	T									
7524	U-2 E		7554						7864	U-3 C	T									
7525	U-2 E		7555						7865	U-3 C	T									
7526	U-2 E		7556						7866	U-3 E	T									
7527	U-2 E		7557						7867	U-3 E	T									
7528	U-2 E		7558						7868	U-3 E	T									
7529	U-2 E		7559						7869	U-3 E	T									

LIST OF ENGINES BY CLASSES

The abbreviations given below are used in the following list of engines by classes.

S- Indicates the application of a superheater.

St:- Stephenson valve gear.

B-Baker valve gear.

Wal:- Walschaert valve gear.

Y-Young valve gear.

Safety valves are indicated by number and size.

Injectors are indicated by number and size.

Engineer's Brake Valve Equipment indicated thus:

Schedule "A1" indicates the old standard automatic brake without engine truck brake, high speed brake or straight air brake.

Schedule "SWA" indicates the combined automatic and straight air brake.

" "AG" " the old standard automatic brake with engine truck brake, high speed brake and straight air brake.

Schedule "ET6" indicates No. 6 ET without engine truck brake.

" "ET6D" " No. 6 ET with engine truck brake.

Note:- Unless otherwise designated air brake equipment is Westinghouse.

Steam heat, Air signal and Water scoop are indicated by the words "Yes" or "No."

Steam heat or Air signal when applied separately are indicated by the letters "SH" and "AS" respectively.

Staybolt equipment is indicated by "Rigid," "B.Z." indicating flexible bolts in the breaking zone, and "Flex." indicating a complete installation of flexible bolts.

The fire doors are indicated as hand or pneumatic operated.

Tender trucks are designated as "R.B." or rigid bolster, and "S.B." or swing bolster.

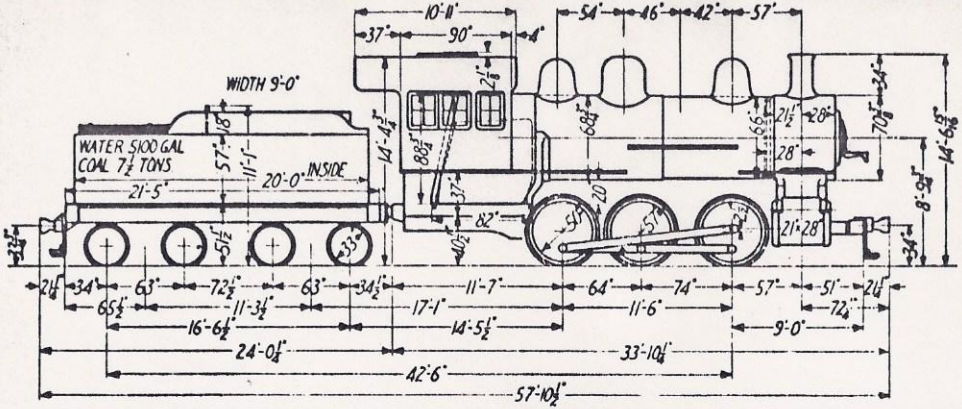

Built by the *American Locomotive Co.*	Kind of main valve *12 in. Piston.*	Weight on front truck working order —
Rogers Works.	Firebox length, inside *72⅛ in.*	
Builder's order No. *J-1763*	Firebox width, inside *65¼ in.*	Weight on drivers working order *163000 lbs.*
	Grate area *32.7 sq.ft.*	
	Tubes, number large *22-5½ in.*	Weight on rear truck working order —
Number of Locomotives *2*	Tubes, number small *165-2 in.*	
	Tubes, length over sheets *16 ft. 0 in.*	Total weight of engine working order *163000 lbs.*
	Heating surface tubes *1875.4 sq.ft.*	
Note *Engines are equipped with a Ragonnet power reversing gear.*	Heating surface firebox and arch tubes *139.4 sq.ft.*	Weight of tender, loaded *104000 lbs.*
		Weight of tender, empty *46500 lbs.*
Rating *33.1%*	Total heating surface *2014.8 sq.ft.*	Steam pressure *180 lbs.*
	Heating surface superheater *382 sq.ft.*	Max. tractive force *33140 lbs.*

CLASS B-10F

ENGINE NUMBER	DATE BUILT	SUPERHEAT.	VALVE GEAR	SAFETY VALVES	INJECTORS	ENGINEERS BRAKE VALVE EQUIPMENT	STEAM HEAT AIR SIGNAL	AIR PUMP	STAYBOLTS	FIREDOORS	TENDER TRUCKS	WATER SCOOP	ENGINE NUMBER	DATE BUILT	SUPERHEAT.	VALVE GEAR	SAFETY VALVES	INJECTORS	ENGINEERS BRAKE VALVE EQUIPMENT	STEAM HEAT AIR SIGNAL	AIR PUMP	STAYBOLTS	FIREDOORS	TENDER TRUCKS	WATER SCOOP
~~8750~~	~~4-1907~~	~~S~~	~~St.~~	~~2-3"~~	~~#E, #9A~~	~~SWA~~	~~S.H.~~	~~8½"cc~~	~~B.Z.~~	~~Pneu~~	~~R.B.~~	~~No~~	~~8755~~	~~4-1907~~	~~S~~	~~St.~~	~~2-3"~~	~~2-#E~~	~~SWA~~	~~S.H.~~	~~8½"cc~~	~~B.Z.~~	~~Pneu~~	~~R.B.~~	~~No~~
~~8751~~	"	~~S~~	"	"	"	"	"	~~11"~~	"	"	"	"	~~8756~~	"	~~S~~	"	"	~~#E, #9A~~	"	"	~~11"~~	"	"	"	"
6852	4-1907	S	St	2-3"	#E, #9A	S.WA	S.H.	8½"cc	B.Z.	Pneu	R.B.	No.	6857	4-1907	S	St	2-3"	2-#E	SWA	S.H.	8½"cc	B.Z.	Pneu	R.B.	No.
~~8753~~	"	...	"	"	#E, #8	"	No	"	"	"	"	"	~~8758~~	"	~~S~~	"	"	"	"	"	~~8½"cc~~	"	"	"	"
~~8754~~	"	~~S~~	"	"	#E, #9A	"	"	"	"	"	"	"	~~8759~~	"	~~S~~	"	"	~~#E, #9A~~	"	"	"	"	"	"	"

Old MCRR No's 8750-8759

Engines equipped with a Superheater have the following differences:-

Tubes, number large	22-5½ in.	Heating surface superheater	382 sq.ft.
Tubes, number small	165-2 in.	Weight on drivers, working order	163000 lbs.
Heating surface tubes	1875.9 sq.ft.		
Heating surface firebox and arch tubes	139.4 sq.ft.	Total weight of engine, working order	183000 lbs.
Total heating surface	2014.8 sq.ft.		

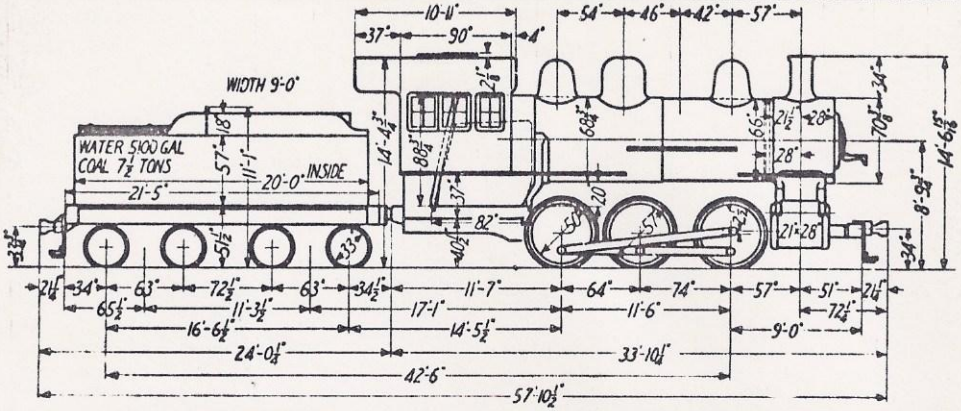

Built by the American Locomotive Co. Brooks & †Montreal Works.	Kind of main valve ..... 12 in. Piston	Weight on front truck working order ..... —
Builder's order No. B-1192 †Q-111	Firebox length, inside ..... 72 1/8 in.	Weight on drivers working order ..... 168000 lbs.
	Firebox width, inside ..... 65¾ in.	Weight on rear truck working order ..... —
Number of Locomotives †2 10	Grate area ..... 327 sq.ft.	Total weight of engine working order ..... 168000 lbs.
Note:- Engines are equipped with a Ragonnet power reversing gear.	Tubes, number large ..... 22-5½ in.	Weight of tender, loaded ..... 104000 lbs.
Note †Refers to engine 8591.	Tubes, number small ..... 165-2 in.	Weight of tender, empty ..... 46500 lbs.
Rating 33.1%	Tubes, length over sheets ..... 16 ft. 0 in.	Steam pressure ..... 180 lbs.
	Heating surface tubes ..... 1875.4 sq.ft.	Max. tractive force ..... 33140 lbs.
	Heating surface firebox and arch tubes ..... 139.4 sq.ft.	
	Total heating surface ..... 2014.8 sq.ft.	
	Heating surface superheater 382 sq.ft.	

CLASS B-10N

ENGINE NUMBER	DATE BUILT	SUPERHEAT.	VALVE GEAR	SAFETY VALVES	INJECTORS	ENGINEERS BRAKE VALVE EQUIPMENT	STEAM HEAT AIR SIGNAL	AIR PUMP	STAYBOLTS	FIREDOORS	TENDER TRUCKS	WATER SCOOP
6991	12-1905	S	St.	2-3"	2-#E	ET6	S.H.	8½"cc	B.Z.	Pneu.	R.B.	No
~~7-1909~~							~~No~~					
6861	"	S	"	"	"	"	No	"	"	"	"	"
6862	"	S	"	"	"	"	S.H.	11"	"	"	"	"
6863	"	S	"	"	"	"	No	8½"cc	"	"	"	"
6864	"	S	"	"	"	"	"	"	"	"	"	"
6865	"	S	"	"	"	"	S.H.	"	"	"	"	"

ENGINE NUMBER	DATE BUILT	SUPERHEAT.	VALVE GEAR	SAFETY VALVES	INJECTORS	ENGINEERS BRAKE VALVE EQUIPMENT	STEAM HEAT AIR SIGNAL	AIR PUMP	STAYBOLTS	FIREDOORS	TENDER TRUCKS	WATER SCOOP
~~7-1909~~		S	St.	2-3"	2-#E	ET6	No	11"	B.Z.	Pneu.	R.B.	No
6867	"	S	"	"	"	"	S.H.	8½"cc	"	"	"	"
6868	"	S	"	"	"	"	No	"	"	"	"	"
6869	"	S	"	"	"	"	S.H.	"	"	"	"	"
6870	"	S	"	"	"	"	No	11"	"	"	"	"
6871	"	S	"	"	"	"	S.H.	"	"	"	"	"
6872	"	S	"	"	"	"	No	8½"cc	"	"	"	"

Old MCRR Nos 8591, 8761 - 8772

Engines equipped with a Superheater have the following differences:-

Tubes, number large ..... 22-5½ in.
Tubes, number small ..... 165-2 in.
Heating surface tubes ..... 1875.4 sq.ft.
Heating surface firebox and arch tubes ..... 139.4 sq.ft.
Total heating surface ..... 2014.8 sq.ft.

Heating surface superheater ..... 382 sq.ft.
Weight on drivers, working order ..... 168000 lbs.
Total weight of engine, working order ..... 168000 lbs.

CLASS B-10N

M. C. R. R.

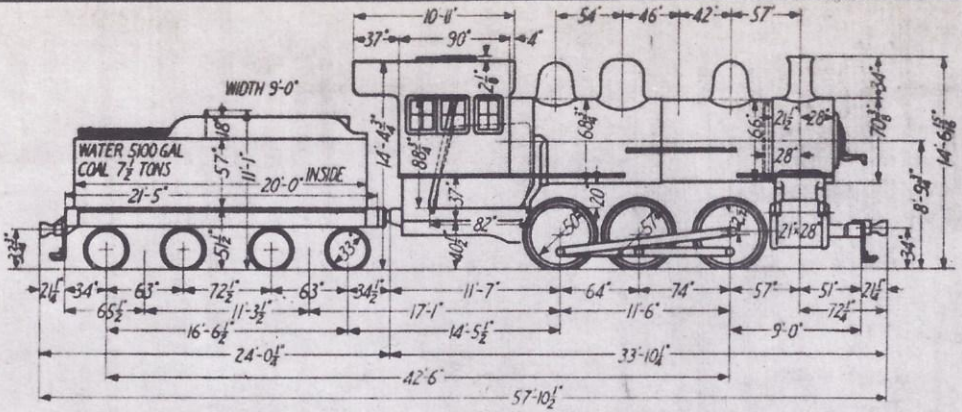

Built by the American Locomotive Co. Schenectady Works.		Kind of main valve	12 in. Piston	Weight on front truck working order	——
Builder's order No.	S-697	Firebox length, inside	72¼ in.	Weight on drivers working order	168000 lbs.
		Firebox width, inside	65¼ in.	Weight on rear truck working order	——
		Grate area	32.7 sq.ft.		
Number of Locomotives	5	Tubes, number large	22-5½ in.		
Engines designed for 22° curve		Tubes, number small	165-2 in.		
		Tubes, length over sheets	16 ft. 0 in.	Total weight of engine working order	168000 lbs.
Note Engines are equipped with a Ragonnet power reversing gear.		Heating surface tubes	1875.4 sq.ft.		
		Heating surface firebox and arch tubes	139.4 sq.ft.	Weight of tender, loaded	104000 lbs.
Rating	33.1 %			Weight of tender, empty	46500 lbs.
Factor of adhesion	5.06	Total heating surface	2014.8 sq.ft.	Steam pressure	180 lbs.
		Heating surface superheater	382 sq.ft.	Max. tractive force	33140 lbs.

CLASS B-10R

ENGINE NUMBER	DATE BUILT	SUPERHEAT.	VALVE GEAR	SAFETY VALVES	INJECTORS	ENGINEERS BRAKE VALVE EQUIPMENT	STEAM HEAT AIR SIGNAL	AIR PUMP	STAYBOLTS	FIREDOORS	TENDER TRUCKS	WATER SCOOP	ENGINE NUMBER	DATE BUILT	SUPERHEAT	VALVE GEAR	SAFETY VALVES	INJECTORS	ENGINEERS BRAKE VALVE EQUIPMENT	STEAM HEAT AIR SIGNAL	AIR PUMP	STAYBOLTS	FIREDOORS	TENDER TRUCKS	WATER SCOOP
6873	7-1910	S	St.	2-3"	2-#E	ET6	Yes	11"	B.Z.	Pneu.	R.B.	No													
6874	"	S	"	"	"	"	S.H.	"	"	"	"	"													
~~8775~~	~~"~~	~~S~~	~~"~~	~~"~~	~~"~~	~~"~~	~~"~~	~~8½"~~	~~"~~	~~"~~	~~"~~	~~"~~													
6876	"	S	"	"	"	"	Yes	"	"	"	"	"													
6877	"	S	"	"	"	"	S.H.	11"	"	"	"	"													

Old MCRR No's 8773-8777

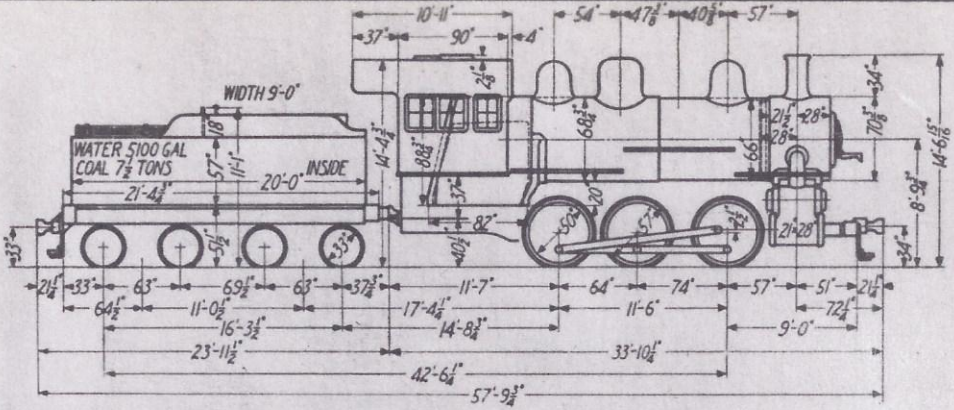

Built by the American Locomotive Co. Pittsburgh Works.	Kind of main valve 12 in. Piston	Weight on front truck working order —
Builder's order No. P-674	Firebox length, inside 72⅛ in.	
	Firebox width, inside 65¼ in.	Weight on drivers working order 168000 lbs.
	Grate area 32.7 sq.ft.	
	Tubes, number large 22-5½ in.	Weight on rear truck working order —
Number of Locomotives 20	Tubes, number small 165-2 in.	
	Tubes, length over sheets 16 ft. 0 in.	Total weight of engine working order 168000 lbs.
	Heating surface tubes 1875.4 sq.ft.	
Note	Heating surface firebox and arch tubes 139.4 sq.ft.	Weight of tender, loaded 104000 lbs.
		Weight of tender, empty 46500 lbs.
Rating 33.1 %	Total heating surface 2014.8 sq.ft.	Steam pressure 180 lbs.
	Heating surface superheater 382 sq.ft.	Max. tractive force 33140 lbs.

CLASS B-10w

ENGINE NUMBER	DATE BUILT	SUPERHEAT.	VALVE GEAR	SAFETY VALVES	INJECTORS	ENGINEERS BRAKE VALVE EQUIPMENT	STEAM HEAT AIR SIGNAL	AIR PUMP	STAYBOLTS	FIREDOORS	TENDER TRUCKS	WATER SCOOP	ENGINE NUMBER	DATE BUILT	SUPERHEAT	VALVE GEAR	SAFETY VALVES	INJECTORS	ENGINEERS BRAKE VALVE EQUIPMENT	STEAM HEAT AIR SIGNAL	AIR PUMP	STAYBOLTS	FIREDOORS	TENDER TRUCKS	WATER SCOOP
6878	5-1912	S	Wal.	2-3"	2-#E	ET6	S.H.	8½"cc	Flex.	Pneu.	R.B.	No	6888	6-1912	S	Wal.	2-3"	2-#E	ET6	Yes	8½"cc	Flex.	Pneu.	R.B.	No
6879	"	S	"	"	"	"	"	"	"	"	"	"	6889	"	S	"	"	"	"	No	"	"	"	"	"
6880	"	S	"	"	"	"	No	"	"	"	"	"	6890	"	S	"	"	"	"	"	"	"	"	"	"
6881	"	S	"	"	"	"	S.H.	"	"	"	"	"	6891	"	S	"	"	"	"	Yes	"	"	"	"	"
6882	"	S	"	"	"	"	Yes	"	"	"	"	"	6892	"	S	"	"	"	"	No	"	"	"	"	"
6883	"	S	"	"	"	"	S.H.	"	"	"	"	"	6893	"	S	"	"	"	"	Yes	"	"	"	"	"
6884	6-1912	S	"	"	"	"	No	"	"	"	"	"	6894	"	S	"	"	"	"	"	"	"	"	"	"
6885	"	S	"	"	"	"	S.H.	"	"	"	"	"	6895	"	S	"	"	"	"	No	"	"	"	"	"
6886	"	S	"	"	"	"	Yes	"	"	"	"	"	6896	"	S	"	"	"	"	"	"	"	"	"	"
6887	"	S	"	"	"	"	No	"	"	"	"	"	6897	"	S	"	"	"	"	S.H.	"	"	"	"	"

Old MCRR No's 8778-8797

M.C.R.R.

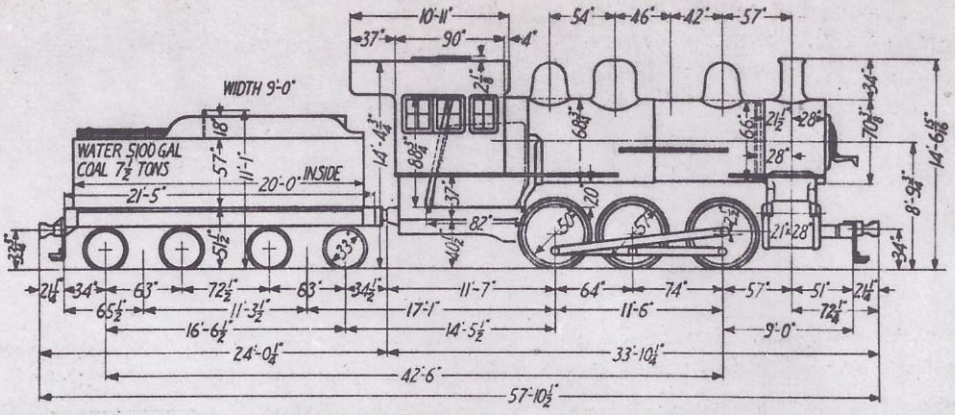

Built by the American Locomotive Co. Montreal Works.	Kind of main valve: 12 in. Piston	Weight on front truck working order: ———
Builder's order No. Q-142	Firebox length, inside: 72¼ in.	
	Firebox width, inside: 63¾ in.	Weight on drivers working order: 168000 lbs.
	Grate area: 32.7 sq. ft.	
Number of Locomotives 5	Tubes, number large: 22: 5½ in.	Weight on rear truck working order: ———
All engines equipped with "Ragonnet" power reverse gear.	Tubes, number small: 165: 2 in.	
Note Engines designed for 22° curve	Tubes, length over sheets: 16 ft. 0 in.	Total weight of engine working order: 168000 lbs.
	Heating surface tubes: 1875.4 sq. ft.	
Rating 33.1%	Heating surface firebox and arch tubes: 139.4 sq. ft.	Weight of tender, loaded: 104000 lbs.
Factor of adhesion: 5.06	Total heating surface: 2014.8 sq. ft.	Weight of tender, empty: 46500 lbs.
	Heating surface superheater: 382 sq. ft.	Steam pressure: 180 lbs.
		Max. tractive force: 33190 lbs.

CLASS B-10x

ENGINE NUMBER	DATE BUILT	SUPERHEAT.	VALVE GEAR	SAFETY VALVES	INJECTORS	ENGINEERS BRAKE VALVE EQUIPMENT	STEAM HEAT AIR SIGNAL	AIR PUMP	STAYBOLTS	FIREDOORS	TENDER TRUCKS	WATER SCOOP	ENGINE NUMBER	DATE BUILT	SUPERHEAT	VALVE GEAR	SAFETY VALVES	INJECTORS	ENGINEERS BRAKE VALVE EQUIPMENT	STEAM HEAT AIR SIGNAL	AIR PUMP	STAYBOLTS	FIREDOORS	TENDER TRUCKS	WATER SCOOP
6992	10-1910	S	St.	2-3"	2-¾E	E76	Yes	8½cc	B2	Pneu	R.B.	No													
6993	" "	S	" "	" "	" "	" "	S.H.	" "	" "	" "	" "	" "													
6994	" "	S	" "	" "	" "	" "	" "	" "	" "	" "	" "	" "													
6995	" "	S	" "	" "	" "	" "	" "	" "	" "	" "	" "	" "													
~~8596~~	~~—~~	~~S~~	~~"~~	~~"~~	~~"~~	~~"~~	~~"~~	~~"~~	~~"~~	~~"~~	~~"~~	~~"~~													

Old MCRR No's 8592-8596

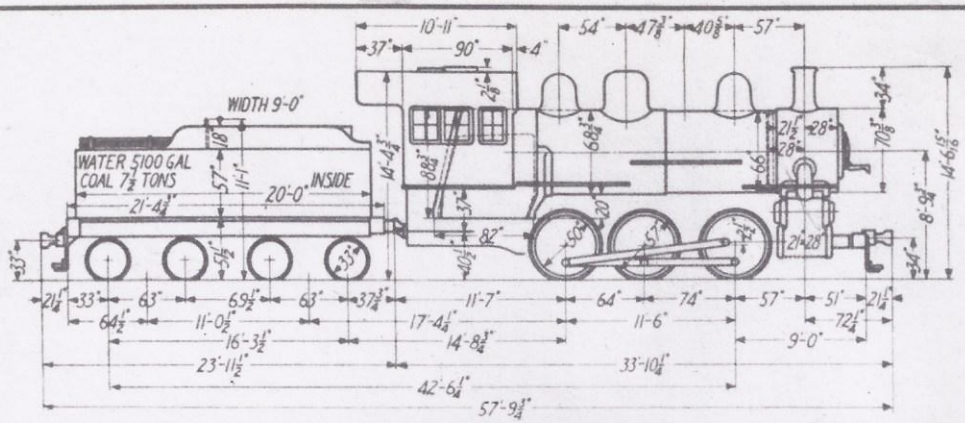

Built by the	American Locomotive Co. Pittsburgh Works.	Kind of main valve	12 in. Piston	Weight on front truck working order	——
Builder's order No.	Class B-11A - P-682 Class B-11E - P-690	Firebox length, inside	72 1/8 in.	Weight on drivers working order	170500 lbs.
		Firebox width, inside	65¼ in.		
		Grate area	32.7 sq.ft.		
		Tubes, number large	22-5½ in.	Weight on rear truck working order	——
Number of Locomotives	Class B-11A - ~~1~~ ~~1~~ 11 Class B-11E - 15	Tubes, number small	165-2" in.		
		Tubes, length over sheets	16 ft. 0 in.	Total weight of engine working order	170500 lbs.
		Heating surface tubes	1875.4 sq.ft.		
Note		Heating surface firebox and arch tubes	139.4 sq.ft.	Weight of tender, loaded	104000 lbs.
				Weight of tender, empty	46500 lbs.
Rating	33.1%	Total heating surface	2014.8 sq.ft.	Steam pressure	180 lbs.
		Heating surface superheater	382 sq.ft.	Max. tractive force	33140 lbs.

CLASS B-11A & B-11E

ENGINE NUMBER	DATE BUILT	SUPERHEAT.	VALVE GEAR	SAFETY VALVES	INJECTORS	ENGINEERS BRAKE VALVE EQUIPMENT	STEAM HEAT AIR SIGNAL	AIR PUMP	STAYBOLTS	FIREDOORS	TENDER TRUCKS	WATER SCOOP	ENGINE NUMBER	DATE BUILT	SUPERHEAT.	VALVE GEAR	SAFETY VALVES	INJECTORS	ENGINEERS BRAKE VALVE EQUIPMENT	STEAM HEAT AIR SIGNAL.	AIR PUMP	STAYBOLTS	FIREDOORS	TENDER TRUCKS	WATER SCOOP
CLASS B-11a Old MCRR No's 8898-8899, 8800-8809																									
6898	12-1912	S	Wal.	2-3"	2-#E	ET6	S.H.	8½"cc	Flex.	Pneu.	R.B.	No	6904	12-1912	S	Wal.	2-3"	2-#E	ET6	No	8½"cc	Flex.	Pneu.	R.B.	No
6899	"	S	"	"	"	"	No	"	"	"	"	"	~~8805~~	"	S	"	"	"	"	"	"	"	"	"	"
6900	"	S	"	"	"	"	"	"	"	"	"	"	6906	"	S	"	"	"	"	"	"	"	"	"	"
6901	"	S	"	"	"	"	S.H.	"	"	"	"	"	6907	"	S	"	"	"	"	"	"	"	"	"	"
6902	"	S	"	"	"	"	"	"	"	"	"	"	6908	"	S	"	"	"	"	"	"	"	"	"	"
6903	"	S	"	"	"	"	No	"	"	"	"	"	6909	"	S	"	"	"	"	S.H.	"	"	"	"	"
CLASS B-11e																									
6920	4-1913	S	Wal.	2-3"	2-#E	ET6	No	8½"cc	Flex.	Pneu.	R.B.	No	6928	4-1913	S	Wal.	2-3"	2-#E	ET6	No	8½"cc	Flex.	Pneu.	R.B.	No
6921	"	S	"	"	"	"	"	"	"	"	"	"	6929	"	S	"	"	"	"	"	"	"	"	"	"
6922	"	S	"	"	"	"	"	"	"	"	"	"	6930	"	S	"	"	"	"	"	"	"	"	"	"
6923	"	S	"	"	"	"	S.H.	"	"	"	"	"	6931	"	S	"	"	"	"	S.H.	"	"	"	"	"
6924	"	S	"	"	"	"	"	"	"	"	"	"	6932	"	S	"	"	"	"	No	"	"	"	"	"
6925	"	S	"	"	"	"	No	"	"	"	"	"	6933	"	S	"	"	"	"	"	"	"	"	"	"
6926	"	S	"	"	"	"	S.H.	"	"	"	"	"	6934	6-1913	S	"	"	"	"	S.H.	"	"	"	"	"
6927	"	S	"	"	"	"	No	"	"	"	"	"													

Old MCRR No's 8820-8834

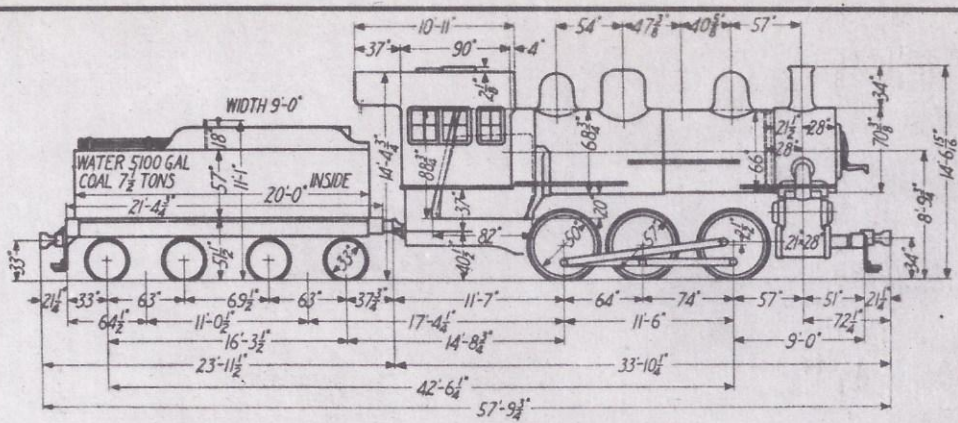

Built by the American Locomotive Co. Montreal Works.	Kind of main valve 12 in. Piston	Weight on front truck working order —
Builder's order No. Q-209	Firebox length, inside 72¼ in	
	Firebox width, inside 65¾ in.	Weight on drivers working order 172500 lbs.
	Grate area 32.7 sq.ft.	
Number of Locomotives 3	Tubes, number large 22-5½ in.	Weight on rear truck working order —
	Tubes, number small 165-2 in.	
	Tubes, length over sheets 16 ft. 0 in.	Total weight of engine working order 172500 lbs.
Note	Heating surface tubes 1875.4 sq.ft.	
	Heating surface firebox and arch tubes 139.4 sq.ft.	Weight of tender, loaded 104000 lbs.
Rating 33.1%		Weight of tender, empty 46500 lbs.
	Total heating surface 2014.8 sq.ft.	Steam pressure 180 lbs.
	Heating surface superheater 382 sq.ft.	Max. tractive force 33140 lbs.

CLASS B-11B

ENGINE NUMBER	DATE BUILT	SUPERHEAT.	VALVE GEAR	SAFETY VALVES	INJECTORS	ENGINEERS BRAKE VALVE EQUIPMENT	STEAM HEAT AIR SIGNAL	AIR PUMP	STAYBOLTS	FIREDOORS	TENDER TRUCKS	WATER SCOOP	ENGINE NUMBER	DATE BUILT	SUPERHEAT.	VALVE GEAR	SAFETY VALVES	INJECTORS	ENGINEERS BRAKE VALVE EQUIPMENT	STEAM HEAT AIR SIGNAL	AIR PUMP	STAYBOLTS	FIREDOORS	TENDER TRUCKS	WATER SCOOP
6997	1-1913	S	Wal.	2-3"	2-#E	ET6	S.H.	8½cc	Flex.	Pneu.	R.B.	No													
6998	"	S	"	"	"	"	No	"	"	"	"	"													
6999	"	S	"	"	"	"	S.H.	"	"	"	"	"													

Old MCRR No's 8597-8599

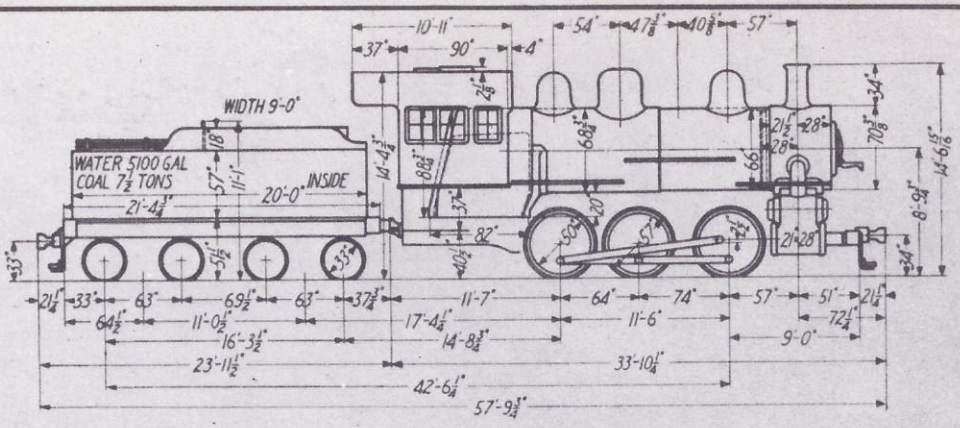

Built by the Lima Locomotive Corporation		Kind of main valve	12 in. Piston.	Weight on front truck working order	——
Builder's order No.	L-1253	Firebox length, inside	72⅛ in.	Weight on drivers working order	170500 lbs.
		Firebox width, inside	65 9/16 in.	Weight on rear truck working order	——
		Grate area	32.7 sq.ft.		
		Tubes, number large	22-5½ in.		
Number of Locomotives	10	Tubes, number small	165-2 in.		
		Tubes, length over sheets	16 ft. 0 in.	Total weight of engine working order	170500 lbs.
		Heating surface tubes	1875.4 sq.ft.		
Note		Heating surface firebox and arch tubes	139.4 sq.ft.	Weight of tender, loaded	104000 lbs.
				Weight of tender, empty	46500 lbs.
Rating	33.1 %	Total heating surface	2014.8 sq.ft.	Steam pressure	180 lbs.
		Heating surface superheater	382 sq.ft.	Max. tractive force	33140 lbs.

CLASS B-11c

ENGINE NUMBER	DATE BUILT	SUPERHEAT.	VALVE GEAR	SAFETY VALVES	INJECTORS	ENGINEERS BRAKE VALVE EQUIPMENT	STEAM HEAT AIR SIGNAL	AIR PUMP	STAYBOLTS	FIREDOORS	TENDER TRUCKS	WATER SCOOP	ENGINE NUMBER	DATE BUILT	SUPERHEAT	VALVE GEAR	SAFETY VALVES	INJECTORS	ENGINEERS BRAKE VALVE EQUIPMENT	STEAM HEAT AIR SIGNAL	AIR PUMP	STAYBOLTS	FIREDOORS	TENDER TRUCKS	WATER SCOOP
6910	8-1913	S	Wal.	2-3"	2-#E	ET6	No	8½CC	Flex.	Pneu.	R.B.	No	6915	8-1913	S	Wal.	2-3"	2-#E	ET6	No	8½CC	Flex.	Pneu.	R.B.	No.
6911	"	S	"	"	"	"	"	"	"	"	"	"	6916	9-1913	S	"	"	"	"	"	"	"	"	"	"
6912	"	S	"	"	"	"	S.H.	"	"	"	"	"	6917	"	S	"	"	"	"	S.H.	"	"	"	"	"
6913	"	S	"	"	"	"	"	"	"	"	"	"	6918	"	S	"	"	"	"	"	"	"	"	"	"
6914	"	S	"	"	"	"	"	"	"	"	"	"	6919	"	S	"	"	"	"	No	"	"	"	"	"

Old MCRR No's 8810- 8819

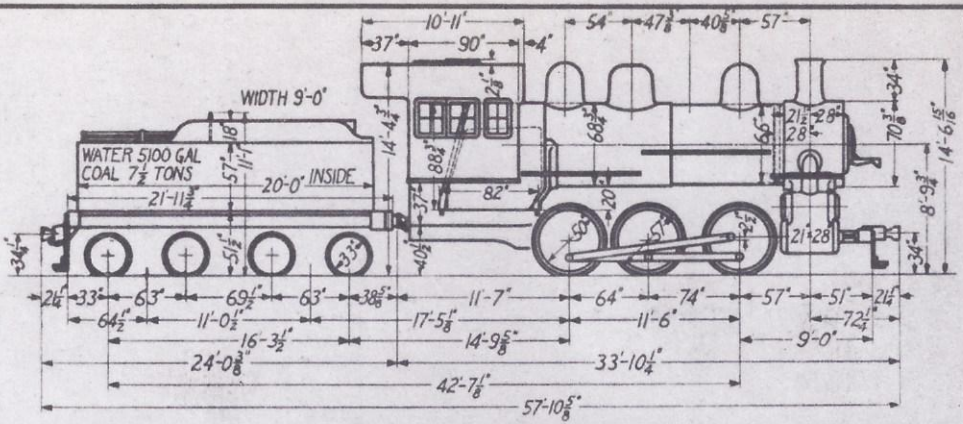

Built by the	Baldwin Locomotive Co.	Kind of main valve	12 in. Piston	Weight on front truck working order	—
Builder's order No.	9882	Firebox length, inside	72¼ in.	Weight on drivers working order	170500 lbs.
		Firebox width, inside	65¾ in.		
		Grate area	32.7 sq.ft.		
Number of Locomotives	10	Tubes, number large	22-5½ in.	Weight on rear truck working order	—
		Tubes, number small	165-2 in.		
		Tubes, length over sheets	16 ft. 0 in.	Total weight of engine working order	170500 lbs.
		Heating surface tubes	1875.4 sq.ft.		
Note		Heating surface firebox and arch tubes	139.4 sq.ft.	Weight of tender, loaded	104000 lbs.
				Weight of tender, empty	46500 lbs.
Rating	33.1 %	Total heating surface	2014.8 sq.ft.	Steam pressure	180 lbs.
		Heating surface superheater	382 sq.ft.	Max. tractive force	33140 lbs.

CLASS B-11G

ENGINE NUMBER	DATE BUILT	SUPERHEAT.	VALVE GEAR	SAFETY VALVES	INJECTORS	ENGINEERS BRAKE VALVE EQUIPMENT	STEAM HEAT AIR SIGNAL	AIR PUMP	STAYBOLTS	FIREDOORS	TENDER TRUCKS	WATER SCOOP	ENGINE NUMBER	DATE BUILT	SUPERHEAT.	VALVE GEAR	SAFETY VALVES	INJECTORS	ENGINEERS BRAKE VALVE EQUIPMENT	STEAM HEAT AIR SIGNAL	AIR PUMP	STAYBOLTS	FIREDOORS	TENDER TRUCKS	WATER SCOOP
6935	9-1913	S	Wal.	2-3"	2-#E	ET6	S.H.	8½cc	Flex	Pneu	R.B.	No	6940	9-1913	S	Wal.	2-3"	2-#E	ET6	S.H.	8½cc	Flex	Pneu	R.B.	No
6936	"	S	"	"	"	"	No	"	"	"	"	"	6941	"	S	"	"	"	"	"	"	"	"	"	"
6937	"	S	"	"	"	"	S.H.	"	"	"	"	"	6942	"	S	"	"	"	"	"	"	"	"	"	"
6938	"	S	"	"	"	"	No	"	"	"	"	"	6943	"	S	"	"	"	"	"	"	"	"	"	"
6939	"	S	"	"	"	"	S.H.	"	"	"	"	"	6944	"	S	"	"	"	"	No	"	"	"	"	"

Old MCRR No's 8835-8844

M. C. R. R.

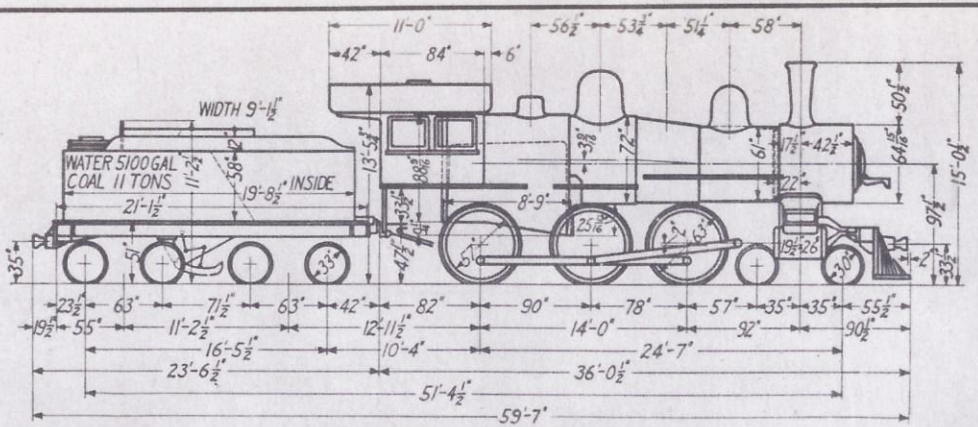

Built by the	M.C.R.R.	Kind of main valve	Richardson balanced	Weight on front truck working order	33800 lbs.
St. Thomas Works.		Firebox length, inside	96 3/16 in.		
Builder's order No.	—	Firebox width, inside	40 3/8 in.	Weight on drivers working order	112900 lbs.
		Grate area	26.9 sq.ft.		
		Tubes, number large	—	Weight on rear truck working order	—
Number of Locomotives	6	Tubes, number small	320 - 2 in.		
		Tubes, length over sheets	14 ft. 0 in.	Total weight of engine working order	146700 lbs.
		Heating surface tubes	2331.7 sq.ft.		
Note		Heating surface firebox and arch tubes	172 sq.ft.	Weight of tender, loaded	110000 lbs.
				Weight of tender, empty	47500 lbs.
Rating	24.%	Total heating surface	2503.7 sq.ft.	Steam pressure	180 lbs.
		Heating surface superheater	—	Max. tractive force	24000 lbs.

CLASS F-82

ENGINE NUMBER	DATE BUILT	SUPERHEAT.	VALVE GEAR	SAFETY VALVES	INJECTORS	ENGINEERS BRAKE VALVE EQUIPMENT	STEAM HEAT AIR SIGNAL	AIR PUMP	STAYBOLTS	FIREDOORS	TENDER TRUCKS	WATER SCOOP	ENGINE NUMBER	DATE BUILT	SUPERHEAT	VALVE GEAR	SAFETY VALVES	INJECTORS	ENGINEERS BRAKE VALVE EQUIPMENT	STEAM HEAT AIR SIGNAL	AIR PUMP	STAYBOLTS	FIREDOORS	TENDER TRUCKS	WATER SCOOP
			St.	2-3"	2-$^{5}/_{8}$10A	SWA	Yes		B.Z.		R.B.	Yes	881	10-1900		St.	2-3"	2-$^{5}/_{8}$10A	SWA	Yes	8½CC	B.Z.	Pneu.	R.B.	Yes
~~8151~~	~~12-1899~~		"	"	"	"	"	11"	"	Pneu.	"	"	~~8154~~	~~1-1901~~		"	"	"	"	"	8½CC	"	"	"	"
880	7-1900		"	"	"	"	"	8½CC	"	"	"	"													

880 old 8152
881 old 8153

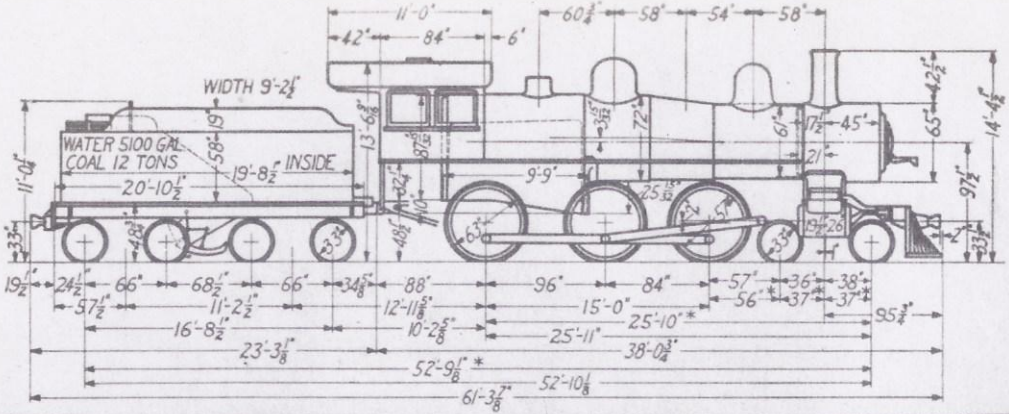

Built by the *American Locomotive Co. Schenectady* Works.	Kind of main valve *Richardson balanced*	Weight on front truck working order *37250 lbs.*
Builder's order No. *S-171*	Firebox length, inside *108 1/8 in.*	Weight on drivers working order *116950 lbs.*
Engines built 12-1900 were built by the Schenectady Locomotive Works.	Firebox width, inside *41 3/8 in.*	Weight on rear truck working order ———
Number of Locomotives *1*	Grate area *31.1 sq. ft.*	Total weight of engine working order *154200 lbs.*
	Tubes, number large ——	Weight of tender, loaded *114200 lbs.*
	Tubes, number small *314 - 2 in.*	Weight of tender, empty *47700 lbs.*
	Tubes, length over sheets *14 ft. 8 in.*	Steam pressure *200 lbs.*
Note *Dimensions marked thus * on the diagram refer to engines built 12-1900*	Heating surface tubes *2397.6 sq. ft.*	Max. tractive force *26670 lbs.*
Rating *26.7%*	Heating surface firebox *174 sq. ft.*	
	and arch tubes ———	
	Total heating surface *2571.6 sq. ft.*	
	Heating surface superheater ———	

CLASS F-82B

ENGINE NUMBER	DATE BUILT	SUPERHEAT.	VALVE GEAR	SAFETY VALVES	INJECTORS	ENGINEERS BRAKE VALVE EQUIPMENT	STEAM HEAT AIR SIGNAL	AIR PUMP	STAYBOLTS	FIREDOORS	TENDER TRUCKS	WATER SCOOP	ENGINE NUMBER	DATE BUILT	SUPERHEAT.	VALVE GEAR	SAFETY VALVES	INJECTORS	ENGINEERS BRAKE VALVE EQUIPMENT	STEAM HEAT AIR SIGNAL	AIR PUMP	STAYBOLTS	FIREDOORS	TENDER TRUCKS	WATER SCOOP
	12-1900		St.	2-3"		SWA	Yes	11"	B.Z.	Pneu.	R.B.	Yes	882	3-1904		St.	2-3"	2-#E	SWA	Yes	11"	B.Z.	Pneu.	R.B.	Yes
													883	"		"	"	"	"	"	"	"	"	"	"
													884	"		"	"	"	"	"	"	"	"	"	"
8167	"		"	"	2-#10A	"	"	"	"	"	"	"													

Old MCRR No's

882 - 8260

M. C. R. R.

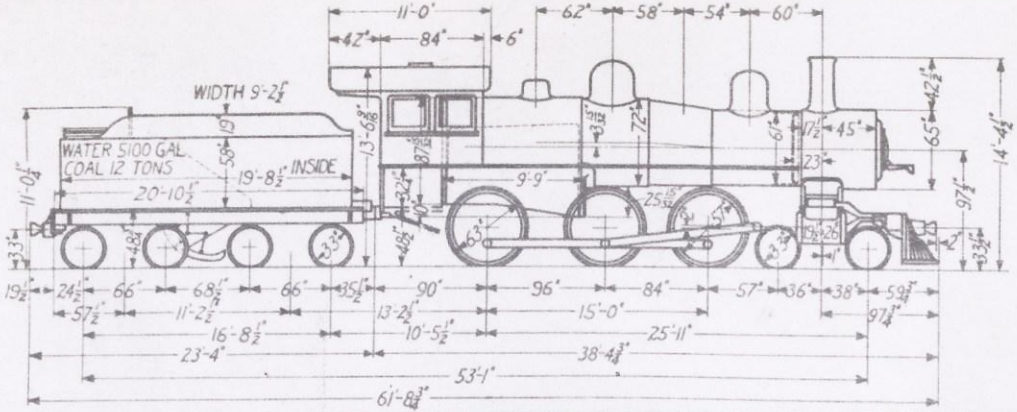

Built by the *American Locomotive Co.* *Schenectady* Works.	Kind of main valve	*Richardson balanced*	Weight on front truck working order	*38500 lbs.*
Builder's order No. *S-264*	Firebox length, inside	*108⅛ in.*	Weight on drivers working order	*120000 lbs.*
	Firebox width, inside	*41⅛ in.*	Weight on rear truck working order	——
	Grate area	*31.1 sq.ft.*	Total weight of engine working order	*158500 lbs.*
Number of Locomotives ~~12~~ 2	Tubes, number large	—	Weight of tender, loaded	*114200 lbs.*
	Tubes, number small	*314 - 2 in.*	Weight of tender, empty	*47700 lbs.*
	Tubes, length over sheets	*14 ft. 8 in.*	Steam pressure	*200 lbs.*
Note	Heating surface tubes	*2397.6 sq.ft.*	Max. tractive force	*26670 lbs.*
Rating *26.7%*	Heating surface firebox and arch tubes	*174 sq.ft.* ——		
	Total heating surface	*2571.6 sq.ft.*		
	Heating surface superheater	——		

CLASS F-82c

ENGINE NUMBER	DATE BUILT	SUPERHEAT.	VALVE GEAR	SAFETY VALVES	INJECTORS	ENGINEERS BRAKE VALVE EQUIPMENT	STEAM HEAT AIR SIGNAL	AIR PUMP	STAYBOLTS	FIREDOORS	TENDER TRUCKS	WATER SCOOP
~~884~~	7-1905		St.	2-3"	#10,#10A	SWA	Yes	8½"cc	B.Z.	Pneu	R.B.	Yes
~~8267~~	"		"	"	2-#10	"	"	11"	"	"	"	"
886	"		"	"	2-#10	"	"	"	"	"	"	"
887	"		"	"	"	"	"	"	"	"	"	"
~~8272~~	"		"	"	#10,#10A	"	"	"	"	"	"	"

885 - 8266
886 - 8270
887 - 8271

†Indicates 2 arch tube installation.
Engines equipped with arch tubes have the following differences:
Heating surface, firebox 187.2 sq.ft.
Heating surface, total 2584.8 sq.ft.

ENGINE NUMBER	DATE BUILT	SUPERHEAT.	VALVE GEAR	SAFETY VALVES	INJECTORS	ENGINEERS BRAKE VALVE EQUIPMENT	STEAM HEAT AIR SIGNAL	AIR PUMP	STAYBOLTS	FIREDOORS	TENDER TRUCKS	WATER SCOOP	ENGINE NUMBER	DATE BUILT	SUPERHEAT.	VALVE GEAR	SAFETY VALVES	INJECTORS	ENGINEERS BRAKE VALVE EQUIPMENT	STEAM HEAT AIR SIGNAL	AIR PUMP	STAYBOLTS	FIREDOORS	TENDER TRUCKS	WATER SCOOP
888	11-1906		St.	2-3"	"E,"9	SWA	Yes	11"	B.Z.	Pneu.	R.B.	Yes	~~8290~~	~~11-1906~~		~~St.~~	~~2-3"~~	~~"E,"9~~	~~SWA~~	~~Yes~~	~~11"~~	~~B.Z.~~	~~Pneu.~~	~~R.B.~~	~~Yes~~
889	"		"	"	"	"	"	"	"	"	"	"		"		"	"	"	"	"	"	"	"	"	"

888 old 8284
889 " 8291

*Indicates 2 arch tube installation.
Engines equipped with arch tubes have the following differences:
Heating surface, firebox 187.2 sq.ft.
Heating surface, total 2584.8 sq.ft.

M. C. R. R.

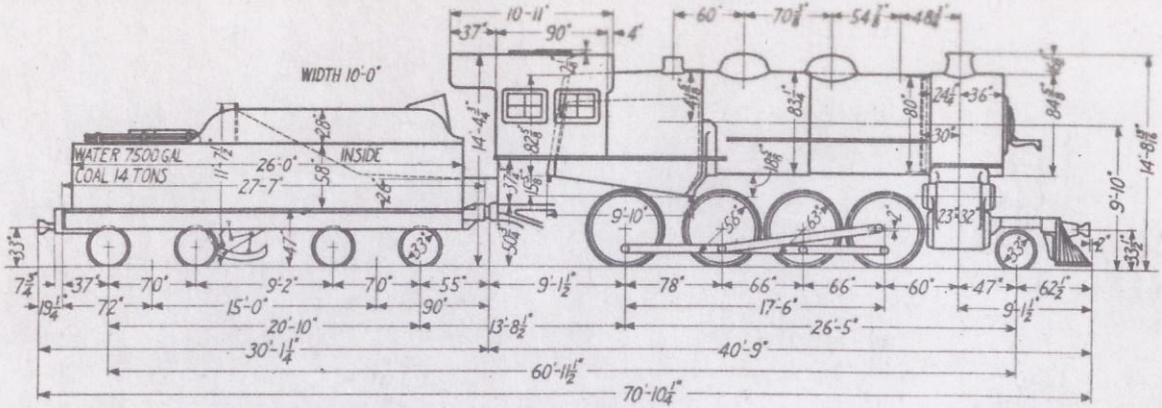

Built by the American Locomotive Co. Brooks Works.	Kind of main valve	14 in. Piston.	Weight on front truck working order	26400 lbs.
Builder's order No. B-1191	Firebox length, inside	108 1/4 in.	Weight on drivers working order	212100 lbs.
	Firebox width, inside	75 1/4 in.	Weight on rear truck working order	—
	Grate area	56.5 sq. ft.	Total weight of engine working order	238500 lbs.
Number of Locomotives 18	Tubes, number large	34-5 13/16 in.	Weight of tender, loaded	155400 lbs.
	Tubes, number small	258-2 in.	Weight of tender, empty	64900 lbs.
	Tubes, length over sheets	15 ft. 0 1/2 in.	Steam pressure	200 lbs.
	Heating surface tubes	2731.4 sq. ft.	Max. tractive force	45700 lbs.
Note	Heating surface firebox and arch tubes	212 sq. ft.		
Rating 45.7%	Total heating surface	2943.4 sq. ft.		
	Heating surface superheater	582 sq. ft.		

CLASS G-6s

ENGINE NUMBER	DATE BUILT	SUPERHEAT.	VALVE GEAR	SAFETY VALVES	INJECTORS	ENGINEERS BRAKE VALVE EQUIPMENT	STEAM HEAT AIR SIGNAL	AIR PUMP	STAYBOLTS	FIREDOORS	TENDER TRUCKS	WATER SCOOP
958	6-1909	S	Wal.	3-3"	2-#E	ET6	Yes	8½"CC	B.Z.	Pneu.	R.B.	Yes
~~7629~~	"	S	"	"	"	"	"	"	"	"	"	"
960	"	S	"	"	"	"	"	"	"	"	"	"
~~7631~~	"	S	"	"	"	"	"	"	"	"	"	"
962	"	S	"	"	"	"	"	"	"	"	"	"
~~7633~~	"	S	"	"	"	"	"	"	"	"	"	"
964	"	S	"	"	"	"	"	"	"	"	"	"
~~7635~~	"	S	"	"	"	"	"	"	"	"	"	"
966	"	S	"	"	"	"	"	"	"	"	"	"

ENGINE NUMBER	DATE BUILT	SUPERHEAT.	VALVE GEAR	SAFETY VALVES	INJECTORS	ENGINEERS BRAKE VALVE EQUIPMENT	STEAM HEAT AIR SIGNAL	AIR PUMP	STAYBOLTS	FIREDOORS	TENDER TRUCKS	WATER SCOOP
~~7637~~	6-1909	S	Wal.	3-3"	2-#E	ET6	Yes	8½"CC	B.Z.	Pneu.	R.B.	Yes
~~7638~~	"	S	"	"	"	"	"	"	"	"	"	"
~~7639~~	"	S	"	"	"	"	"	"	"	"	"	"
~~7640~~	"	S	"	"	"	"	"	"	"	"	"	"
971	7-1909	S	"	"	"	"	"	"	"	"	"	"
~~7642~~	"	S	"	"	"	"	"	"	"	"	"	"
955	"	S	"	"	"	"	"	"	"	"	"	"
957	"	S	"	"	"	"	"	"	"	"	"	"

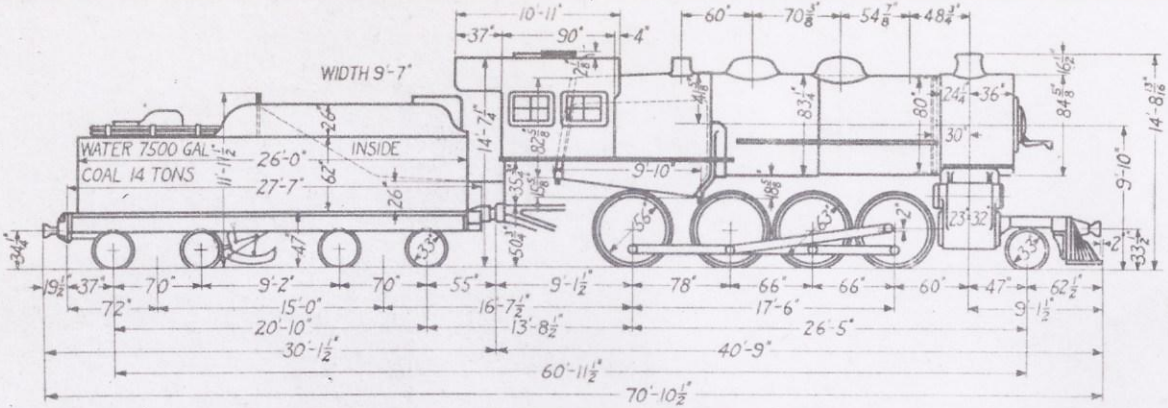

Built by the *American Locomotive Co.*	Kind of main valve *14 in. Piston.*	Weight on front truck working order *26000 lbs.*
Brooks Works.	Firebox length, inside *108 1/8 in.*	
Builder's order No. *B-1212*	Firebox width, inside *75¼ in.*	Weight on drivers working order *216500 lbs.*
	Grate area *56.5 sq.ft.*	
	Tubes, number large *34-5⅜ in.*	Weight on rear truck working order ———
Number of Locomotives *25*	Tubes, number small *268-2 in.*	
	Tubes, length over sheets *15 ft. 0½ in.*	Total weight of engine working order *242500 lbs.*
	Heating surface tubes *2809.6 sq.ft.*	
Note	Heating surface firebox and arch tubes *212 sq.ft.*	Weight of tender, loaded *156500 lbs.*
		Weight of tender, empty *66000 lbs.*
Rating *45.7 %*	Total heating surface *3021.6 sq.ft.*	Steam pressure *200 lbs.*
	Heating surface superheater *582 sq.ft.*	Max. tractive force *45700 lbs.*

CLASS G-6M

ENGINE NUMBER	DATE BUILT	SUPERHEAT.	VALVE GEAR	SAFETY VALVES	INJECTORS	ENGINEERS BRAKE VALVE EQUIPMENT	STEAM HEAT AIR SIGNAL	AIR PUMP	STAYBOLTS	FIREDOORS	TENDER TRUCKS	WATER SCOOP
~~7868~~	~~-1910~~	~~S~~	~~Wal.~~	~~2-3½"~~	~~2-"E~~	~~ET6~~	~~Yes~~	~~8½"cc~~	~~B.Z.~~	~~Pneu.~~	~~R.B.~~	~~Yes~~
1009	"	S	"	"	"	"	"	"	"	"	"	"
1010	"	S	"	"	"	"	"	"	"	"	"	"
1011	"	S	"	"	"	"	"	"	"	"	"	"
1012	"	S	"	"	"	"	"	"	"	"	"	"
1013	"	S	"	"	"	"	"	"	"	"	"	"
1014	"	S	"	"	"	"	"	"	"	"	"	"
~~7875~~	~~"~~	~~S~~	~~"~~	~~"~~	~~"~~	~~"~~	~~"~~	~~"~~	~~"~~	~~"~~	~~"~~	~~"~~
1016	"	S	"	"	"	"	"	"	"	"	"	"
1017	"	S	"	"	"	"	"	"	"	"	"	"
1018	"	S	"	"	"	"	"	"	"	"	"	"
~~7879~~	~~"~~	~~S~~	~~"~~	~~"~~	~~"~~	~~"~~	~~"~~	~~"~~	~~"~~	~~"~~	~~"~~	~~"~~
1020	"	S	"	"	"	"	"	"	"	"	"	"

ENGINE NUMBER	DATE BUILT	SUPERHEAT	VALVE GEAR	SAFETY VALVES	INJECTORS	ENGINEERS BRAKE VALVE EQUIPMENT	STEAM HEAT AIR SIGNAL	AIR PUMP	STAYBOLTS	FIREDOORS	TENDER TRUCKS	WATER SCOOP
1021	-1910	S	Wal.	2-3½"	2-"E	ET6	Yes	8½"cc	B.Z.	Pneu.	R.B.	Yes
~~7882~~	"	S	"	"	"	"	"	"	"	"	"	"
~~7883~~	"	S	"	"	"	"	"	"	"	"	"	"
1024	"	S	"	"	"	"	"	"	"	"	"	"
~~7885~~	"	S	"	"	"	"	"	"	"	"	"	"
~~7886~~	"	S	"	"	"	"	"	"	"	"	"	"
~~7887~~	"	S	"	"	"	"	"	"	"	"	"	"
1028	"	S	"	"	"	"	"	"	"	"	"	"
1029	"	S	"	"	"	"	"	"	"	"	"	"
1030	"	S	"	"	"	"	"	"	"	"	"	"
1031	"	S	"	"	"	"	"	"	"	"	"	"
1032	"	S	"	"	"	"	"	"	"	"	"	"

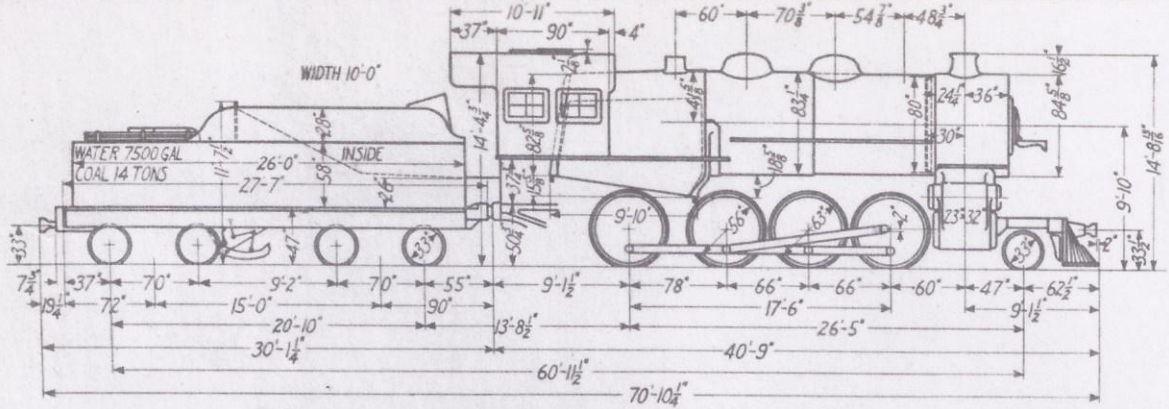

Built by the *American Locomotive Co.*	Kind of main valve *14 in. Piston*	Weight on front truck working order *26000 lbs.*
Schenectady Works.	Firebox length, inside *108⅞ in.*	Weight on drivers working order *216000 lbs.*
Builder's order No. *S-687*	Firebox width, inside *75¼ in.*	Weight on rear truck working order *——*
	Grate area *56.5 sq. ft.*	Total weight of engine working order *242000 lbs.*
Number of Locomotives *20*	Tubes, number large *34-5⅜ in.*	Weight of tender, loaded *155400 lbs.*
	Tubes, number small *258-2 in.*	Weight of tender, empty *64900 lbs.*
Note	Tubes, length over sheets *15 ft. 0½ in.*	Steam pressure *200 lbs.*
Rating *45.7%*	Heating surface tubes *2731.4 sq. ft.*	Max. tractive force *45700 lbs.*
	Heating surface firebox and arch tubes *212 sq. ft.*	
	Total heating surface *2943.4 sq. ft.*	
	Heating surface superheater *582 sq. ft.*	

CLASS G-6o

ENGINE NUMBER	DATE BUILT	SUPERHEAT.	VALVE GEAR	SAFETY VALVES	INJECTORS	ENGINEERS BRAKE VALVE EQUIPMENT	STEAM HEAT AIR SIGNAL	AIR PUMP	STAYBOLTS	FIREDOORS	TENDER TRUCKS	WATER SCOOP	ENGINE NUMBER	DATE BUILT	SUPERHEAT.	VALVE GEAR	SAFETY VALVES	INJECTORS	ENGINEERS BRAKE VALVE EQUIPMENT	STEAM HEAT AIR SIGNAL	AIR PUMP	STAYBOLTS	FIREDOORS	TENDER TRUCKS	WATER SCOOP
~~7828~~	~~5-1910~~	~~S~~	~~Wal.~~	~~3-3"~~	~~2-#E~~	~~ET6~~	~~Yes~~	~~8½"CC~~	~~B.Z.~~	~~Pneu.~~	~~R.B.~~	~~Yes~~	988	5-1910	S	Wal.	3-3"	2-#E	ET6	Yes	8½"CC	B.Z.	Pneu.	R.B.	Yes
979	"	S	"	"	"	"	"	"	"	"	"	"	~~7839~~	"	S	"	"	"	"	"	"	"	"	"	"
~~7830~~	"	S	"	"	"	"	"	"	"	"	"	"	~~7840~~	"	S	"	"	"	"	"	"	"	"	"	"
~~7831~~	"	S	"	"	"	"	"	"	"	"	"	"	~~7841~~	"	S	"	"	"	"	"	"	"	"	"	"
982	"	S	"	"	"	"	"	"	"	"	"	"	~~7842~~	"	S	"	"	"	"	"	"	"	"	"	"
983	"	S	"	"	"	"	"	"	"	"	"	"	993	"	S	"	"	"	"	"	"	"	"	"	"
~~7834~~	"	S	"	"	"	"	"	"	"	"	"	"	994	"	S	"	"	"	"	"	"	"	"	"	"
~~7835~~	"	S	"	"	"	"	"	"	"	"	"	"	995	"	S	"	"	"	"	"	"	"	"	"	"
~~7836~~	"	S	"	"	"	"	"	"	"	"	"	"	996	"	S	"	"	"	"	"	"	"	"	"	"
987	"	S	"	"	"	"	"	"	"	"	"	"	997	"	S	"	"	"	"	"	"	"	"	"	"

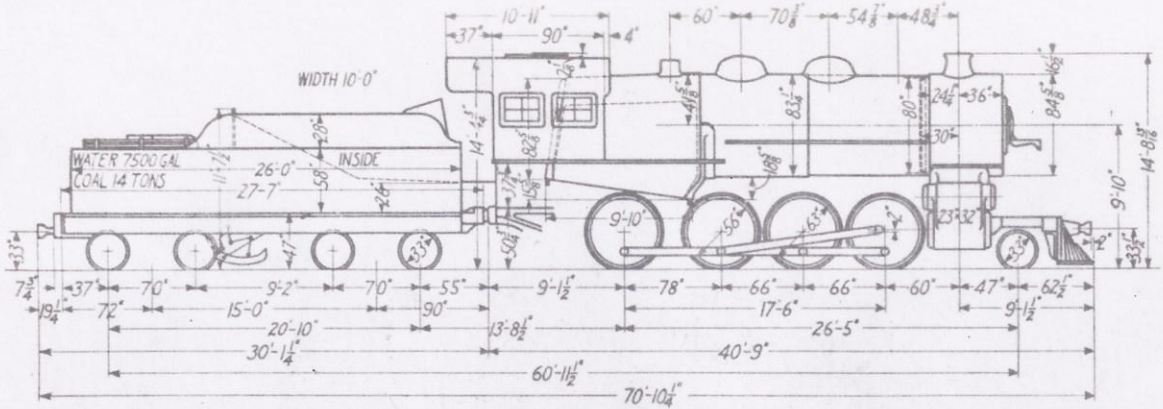

Built by the	American Locomotive Co.	Kind of main valve	14 in. Piston	Weight on front truck working order	26000 lbs.
Montreal	Works.	Firebox length, inside	108⅛ in.	Weight on drivers working order	216000 lbs.
Builder's order No.		Firebox width, inside	75¼ in.	Weight on rear truck working order	——
Class G-6P	Q-121	Grate area	56.5 sq. ft.	Total weight of engine working order	242000 lbs.
Class G-6u	Q-144	Tubes, number large	34-5⅜ in.	Weight of tender, loaded	155400 lbs.
Number of Locomotives		Tubes, number small	258-2 in.	Weight of tender, empty	64900 lbs.
Class G-6P	10	Tubes, length over sheets	15 ft. 0½ in.	Steam pressure	200 lbs.
Class G-6u	8	Heating surface tubes	2731.4 sq. ft.	Max. tractive force	45700 lbs.
Note		Heating surface firebox and arch tubes	212 sq. ft.		
Rating	45.7%	Total heating surface	2943.4 sq. ft.		
		Heating surface superheater	582 sq. ft.		

CLASS G-6P & G-6u

ENGINE NUMBER	DATE BUILT	SUPERHEAT.	VALVE GEAR	SAFETY VALVES	INJECTORS	ENGINEERS BRAKE VALVE EQUIPMENT	STEAM HEAT AIR SIGNAL	AIR PUMP	STAYBOLTS	FIREDOORS	TENDER TRUCKS	WATER SCOOP	ENGINE NUMBER	DATE BUILT	SUPERHEAT	VALVE GEAR	SAFETY VALVES	INJECTORS	ENGINEERS BRAKE VALVE EQUIPMENT	STEAM HEAT AIR SIGNAL	AIR PUMP	STAYBOLTS	FIREDOORS	TENDER TRUCKS	WATER SCOOP
CLASS G-6p																									
~~7610~~	~~3-1910~~	~~S~~	~~Wal.~~	~~3-3"~~	~~2-#E~~	~~ET6~~	~~Yes~~	~~8½"cc~~	~~B.Z.~~	~~Pneu.~~	~~R.B.~~	~~Yes~~	~~7615~~	~~3-1910~~	~~S~~	~~Wal.~~	~~3-3"~~	~~2-#E~~	~~ET6~~	~~Yes~~	~~8½"cc~~	~~B.Z.~~	~~Pneu.~~	~~R.B.~~	~~Yes~~
1041	3-1910	S	Wal.	3-3"	2-#E	ET6	Yes	8½"cc	B.Z.	Pneu	R.B.	Yes	1046	3-1910	S	Wal.	3-3"	2-#E	ET6	Yes	8½"cc	B.Z.	Pneu	R.B.	Yes
1042	"	S	"	"	"	"	"	"	"	"	S.B.	"	~~7617~~	"	S	"	"	"	"	"	"	"	"	"	"
~~7615~~	"	S	"	"	"	"	"	"	"	"	~~R.B.~~	"	1047	"	S	"	"	"	"	"	"	"	"	"	"
~~7614~~	"	S	"	"	"	"	"	"	"	"	"	"	~~7619~~	"	S	"	"	"	"	"	"	"	"	"	"
CLASS G-6u																									
~~7620~~	~~11-1910~~	~~S~~	~~Wal.~~	~~3-3"~~	~~2-#E~~	~~ET6~~	~~Yes~~	~~8½"cc~~	~~B.Z.~~	~~Pneu.~~	~~R.B.~~	~~Yes~~	~~7624~~	~~11-1910~~	~~S~~	~~Wal.~~	~~3-3"~~	~~2-#E~~	~~ET6~~	~~Yes~~	~~8½"cc~~	~~B.Z.~~	~~Pneu.~~	~~R.B.~~	~~Yes~~
~~7621~~	"	~~S~~	"	"	"	"	"	"	"	"	"	"	~~7625~~	"	~~S~~	"	"	"	"	"	"	"	"	"	"
1072	11-1910	S	Wal.	3-3"	2-#E	ET6	Yes	8½"cc	B.Z.	Pneu	R.B.	Yes	~~7626~~	"	~~S~~	"	"	"	"	"	"	"	"	"	"
1073	"	S	"	"	"	"	"	"	"	"	"	"	1077	11-1910	S	Wal.	3-3"	2-#E	ET6	Yes	8½"cc	B.Z.	Pneu	R.B.	Yes

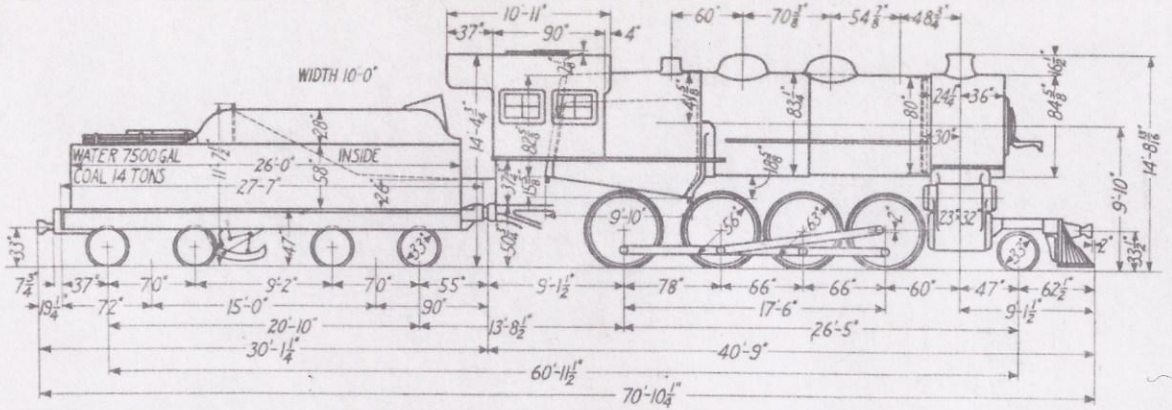

Built by the American Locomotive Co. Schenectady Works.	Kind of main valve 14 in. Piston.	Weight on front truck working order 26000 lbs.
Builder's order No. S-783	Firebox length, inside 108⅛ in.	Weight on drivers working order 216000 lbs.
	Firebox width, inside 75¼ in.	Weight on rear truck working order —
	Grate area 56.5 sq. ft.	Total weight of engine working order 242000 lbs.
Number of Locomotives 20	Tubes, number large 34-5⅜ in.	Weight of tender, loaded 155400 lbs.
	Tubes, number small 258-2 in.	Weight of tender, empty 64900 lbs.
	Tubes, length over sheets 15 ft. 0½ in.	Steam pressure 200 lbs.
	Heating surface tubes 2731.4 sq. ft.	Max. tractive force 45700 lbs.
Note	Heating surface firebox and arch tubes 212 sq. ft.	
Rating 45.7%	Total heating surface 2943.4 sq. ft.	
	Heating surface superheater 582 sq. ft.	

CLASS G-6T

ENGINE NUMBER	DATE BUILT	SUPERHEAT.	VALVE GEAR	SAFETY VALVES	INJECTORS	ENGINEERS BRAKE VALVE EQUIPMENT	STEAM HEAT AIR SIGNAL	AIR PUMP	STAYBOLTS	FIREDOORS	TENDER TRUCKS	WATER SCOOP	ENGINE NUMBER	DATE BUILT	SUPERHEAT.	VALVE GEAR	SAFETY VALVES	INJECTORS	ENGINEERS BRAKE VALVE EQUIPMENT	STEAM HEAT AIR SIGNAL	AIR PUMP	STAYBOLTS	FIREDOORS	TENDER TRUCKS	WATER SCOOP
1048	3-1911	S	Wal.	3-3"	2-#E	ET6	Yes	8½cc	B.Z.	Pnev.	R.B.	Yes	~~7858~~	~~3-1911~~	~~S~~	~~Wal.~~	~~3-3"~~	~~2-#E~~	~~ET6~~	~~Yes~~	~~8½cc~~	~~B.Z.~~	~~Pnev.~~	~~R.B.~~	~~Yes~~
~~7849~~	~~"~~	~~S~~	~~"~~	~~"~~	~~"~~	~~"~~	~~"~~	~~"~~	~~"~~	~~"~~	~~"~~	~~"~~	1059	"	S	"	"	"	"	"	"	"	"	"	"
~~7850~~	~~"~~	~~S~~	~~"~~	~~"~~	~~"~~	~~"~~	~~"~~	~~"~~	~~"~~	~~"~~	~~"~~	~~"~~	1060	"	S	"	"	"	"	"	"	"	"	"	"
~~7851~~	~~"~~	~~S~~	~~"~~	~~"~~	~~"~~	~~"~~	~~"~~	~~"~~	~~"~~	~~"~~	~~"~~	~~"~~	1061	"	S	"	"	"	"	"	"	"	"	"	"
1052	"	S	"	"	"	"	"	"	"	"	"	"	1062	"	S	"	"	"	"	"	"	"	"	"	"
1053	"	S	"	"	"	"	"	"	"	"	"	"	1063	"	S	"	"	"	"	"	"	"	"	"	"
1054	"	S	"	"	"	"	"	"	"	"	"	"	~~7864~~	~~"~~	~~S~~	~~"~~	~~"~~	~~"~~	~~"~~	~~"~~	~~"~~	~~"~~	~~"~~	~~"~~	~~"~~
~~7855~~	~~"~~	~~S~~	~~"~~	~~"~~	~~"~~	~~"~~	~~"~~	~~"~~	~~"~~	~~"~~	~~"~~	~~"~~	1065	"	S	"	"	"	"	"	"	"	"	"	"
~~7856~~	~~"~~	~~S~~	~~"~~	~~"~~	~~"~~	~~"~~	~~"~~	~~"~~	~~"~~	~~"~~	~~"~~	~~"~~	1066	"	S	"	"	"	"	"	"	"	"	"	"
~~7857~~	~~"~~	~~S~~	~~"~~	~~"~~	~~"~~	~~"~~	~~"~~	~~"~~	~~"~~	~~"~~	~~"~~	~~"~~	1067	"	S	"	"	"	"	"	"	"	"	"	"

ENGINES CONVERTED TO SWITCHING LOCOMOTIVES

CLASS					
G-6J	G-6M	G-6O	G-6P	G-6T	G-6U
958 960 971	1011 1014 1016 1018	979 982 987 995	1042 1046 1047	1052 1061 1063 1066	1073 1077
	1028 1030	996		1067	

FOR DATA NOT SHOWN ON THIS PAGE SEE SEPARATE SHEETS FOR INDIVIDUAL CLASSES

M. C. R. R.

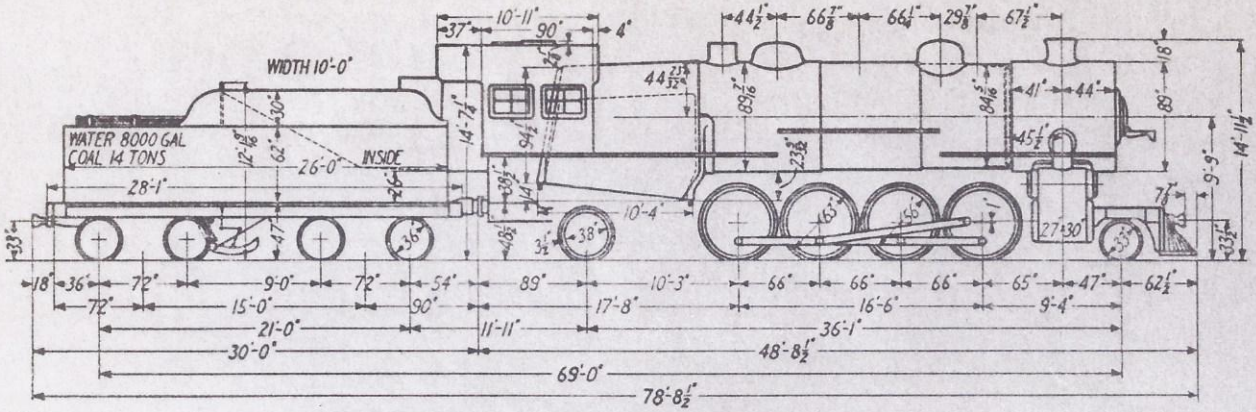

Built by the American Locomotive Co. Brooks Works.	Kind of main valve 16in. Piston	Weight on front truck working order 27500 lbs.
Builder's order No. B-1319	Firebox length, inside 114⅛ in.	Weight on drivers working order 245000 lbs.
	Firebox width, inside 75¼ in.	Weight on rear truck working order 49500 lbs.
	Grate area 59.6 sq.ft.	Total weight of engine working order 322000 lbs.
Number of Locomotives 10	Tubes, number large 43-5½ in.	Weight of tender, loaded 169000 lbs.
	Tubes, number small 295-2 in.	Weight of tender, empty 74300 lbs.
	Tubes, length over sheets 21 ft. 0 in.	Steam pressure 190 lbs.
Note These engines are equipped with a radial buffer between engine and tender.	Heating surface tubes 4490.5 sq.ft.	Max. tractive force 56100 lbs.
Rating 56.1 %	Heating surface firebox and arch tubes 246. sq.ft.	
	Total heating surface 4736.5 sq.ft.	
	Heating surface superheater 1084. sq.ft.	

CLASS H-7a

ENGINE NUMBER	DATE BUILT	SUPERHEAT.	VALVE GEAR	SAFETY VALVES	INJECTORS	ENGINEERS BRAKE VALVE EQUIPMENT	STEAM HEAT AIR SIGNAL	AIR PUMP	STAYBOLTS	FIREDOORS	TENDER TRUCKS	WATER SCOOP	ENGINE NUMBER	DATE BUILT	SUPERHEAT.	VALVE GEAR	SAFETY VALVES	INJECTORS	ENGINEERS BRAKE VALVE EQUIPMENT	STEAM HEAT AIR SIGNAL	AIR PUMP	STAYBOLTS	FIREDOORS	TENDER TRUCKS	WATER SCOOP
2050	-1912	S	Wal.	3-3½"	2-#11	ET6	Yes	8½"cc	Flex.	Pneu.	R.B.	Yes	2055	-1912	S	Wal.	3-3½"	2-#11	ET6	Yes	8½"cc	Flex.	Pneu.	R.B.	Yes
2051	"	S	"	"	"	"	"	"	"	"	"	"	2056	"	S	"	"	"	"	"	"	"	"	"	"
2052	"	S	"	"	"	"	"	"	"	"	"	"	2057	"	S	"	"	"	"	"	"	"	"	"	"
2053	"	S	"	"	"	"	"	"	"	"	"	"	2058	"	S	"	"	"	"	"	"	"	"	"	"
2054	"	S	"	"	"	"	"	"	"	"	"	"	2059	"	S	"	"	"	"	"	"	"	"	"	"

Old MCRR No's 7950-7959
NYC 4000-4009

M. C. R. R.

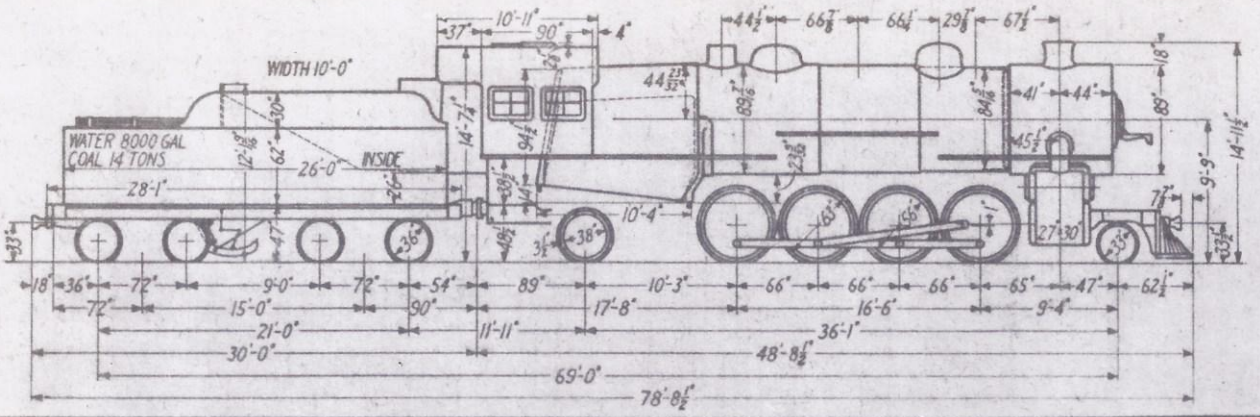

Built by the *American Locomotive Co.* *Brooks* Works.	Kind of main valve *16 in. Piston.*	Weight on front truck working order *27500 lbs.*
Builder's order No. *B-1349*	Firebox length, inside *114 1/8 in.*	Weight on drivers working order *245000 lbs.*
	Firebox width, inside *75 1/8 in.*	Weight on rear truck working order *49500 lbs.*
	Grate area *59.6 sq. ft.*	Total weight of engine working order *322000 lbs.*
Number of Locomotives *15*	Tubes, number large *43-5 3/8 in.*	Weight of tender, loaded *169000 lbs.*
	Tubes, number small *295-2 in.*	Weight of tender, empty *74300 lbs.*
	Tubes, length over sheets *21 ft. 0 in.*	Steam pressure *190 lbs.*
	Heating surface tubes *4490.5 sq. ft.*	Max. tractive force *56100 lbs.*
Note *These engines are equipped with a radial buffer between engine and tender.*	Heating surface firebox and arch tubes *246. sq. ft.*	
Rating *56.1 %*	Total heating surface *4736.5 sq. ft.*	
	Heating surface superheater *1084 sq. ft.*	

CLASS H-7B

ENGINE NUMBER	DATE BUILT	SUPERHEAT.	VALVE GEAR	SAFETY VALVES	INJECTORS	ENGINEERS BRAKE VALVE EQUIPMENT	STEAM HEAT AIR SIGNAL	AIR PUMP	STAYBOLTS	FIREDOORS	TENDER TRUCKS	WATER SCOOP	ENGINE NUMBER	DATE BUILT	SUPERHEAT.	VALVE GEAR	SAFETY VALVES	INJECTORS	ENGINEERS BRAKE VALVE EQUIPMENT	STEAM HEAT AIR SIGNAL	AIR PUMP	STAYBOLTS	FIREDOORS	TENDER TRUCKS	WATER SCOOP
2035	11-1913	S	Wal.	3-3½"	2-#11	ET6	Yes	8½"cc	Flex.	Pneu.	R.B.	Yes	2043	11-1913	S	Wal.	3-3½"	2-#11	ET6	Yes	8½"cc	Flex.	Pneu.	R.B.	Yes
2036	"	S	"	"	"	"	"	"	"	"	"	"	2044	"	S	"	"	"	"	"	"	"	"	"	"
2037	"	S	"	"	"	"	"	"	"	"	"	"	2045	"	S	"	"	"	"	"	"	"	"	"	"
2038	"	S	"	"	"	"	"	"	"	"	"	"	2046	"	S	"	"	"	"	"	"	"	"	"	"
2039	"	S	"	"	"	"	"	"	"	"	"	"	2047	"	S	"	"	"	"	"	"	"	"	"	"
2040	"	S	"	"	"	"	"	"	"	"	"	"	2048	"	S	"	"	"	"	"	"	"	"	"	"
2041	"	S	"	"	"	"	"	"	"	"	"	"	2049	"	S	"	"	"	"	"	"	"	"	"	"
2042	"	S	"	"	"	"	"	"	"	"	"	"													

Old MCRR No's 7935-7949

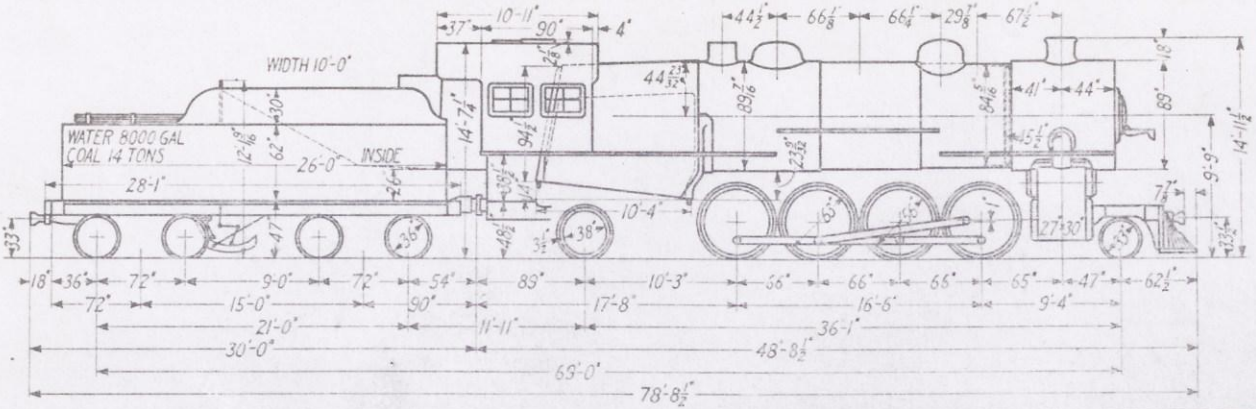

Built by the *American Locomotive Co.* *Brooks* Works.	Kind of main valve *16 in. Piston.*	Weight on front truck working order *27500 lbs.*
Builder's order No. *Class H-7c - B-1347* *Class H-7D - B-1346*	Firebox length, inside *114 1/8 in.*	Weight on drivers working order *245000 lbs.*
Number of Locomotives *Class H-7c - 25* *Class H-7D - 10*	Firebox width, inside *75 1/4 in.*	Weight on rear truck working order *49500 lbs.*
Note *These engines are equipped with a radial buffer between engine and tender.*	Grate area *59.6 sq. ft.*	Total weight of engine working order *322000 lbs.*
Rating *56.1%*	Tubes, number large *43 - 5 3/8 in.*	Weight of tender, loaded *169000 lbs.*
	Tubes, number small *295 - 2 in.*	Weight of tender, empty *74300 lbs.*
	Tubes, length over sheets *21 ft. 0 in.*	Steam pressure *190 lbs.*
	Heating surface tubes *4490.5 sq. ft.*	Max. tractive force *56100 lbs.*
	Heating surface firebox and arch tubes *246 sq. ft.*	
	Total heating surface *4736.5 sq. ft.*	
	Heating surface superheater *1084 sq. ft.*	

CLASS H-7c & H-7D

Old MCRR Nos 7900-7934

ENGINE NUMBER	DATE BUILT	SUPERHEAT.	VALVE GEAR	SAFETY VALVES	INJECTORS	ENGINEERS BRAKE VALVE EQUIPMENT	STEAM HEAT AIR SIGNAL	AIR PUMP	STAYBOLTS	FIREDOORS	TENDER TRUCKS	WATER SCOOP	ENGINE NUMBER	DATE BUILT	SUPERHEAT.	VALVE GEAR	SAFETY VALVES	INJECTORS	ENGINEERS BRAKE VALVE EQUIPMENT	STEAM HEAT AIR SIGNAL	AIR PUMP	STAYBOLTS	FIREDOORS	TENDER TRUCKS	WATER SCOOP
CLASS H-7c																									
2000	11-1913	S	Wal.	3-3½"	2-#11	ET6	Yes	8½"cc	Flex.	Pneu.	R.B.	Yes	2013	11-1913	S	Wal.	3-3½"	2-#E	ET6	Yes	8½"cc	Flex.	Pneu.	R.B.	Yes
2001	"	S	"	"	"	"	"	"	"	"	"	"	2014	"	S	"	"	"	"	"	"	"	"	"	"
2002	"	S	"	"	"	"	"	"	"	"	"	"	2015	"	S	"	"	"	"	"	"	"	"	"	"
2003	"	S	"	"	"	"	"	"	"	"	"	"	2016	"	S	"	"	"	"	"	"	"	"	"	"
2004	"	S	"	"	"	"	"	"	"	"	"	"	2017	"	S	"	"	"	"	"	"	"	"	"	"
2005	"	S	"	"	"	"	"	"	"	"	"	"	2018	"	S	"	"	"	"	"	"	"	"	"	"
2006	"	S	"	"	"	"	"	"	"	"	"	"	2019	"	S	"	"	"	"	"	"	"	"	"	"
2007	"	S	"	"	"	"	"	"	"	"	"	"	2020	"	S	"	"	"	"	"	"	"	"	"	"
2008	"	S	"	"	"	"	"	"	"	"	"	"	2021	"	S	"	"	"	"	"	"	"	"	"	"
2009	"	S	"	"	"	"	"	"	"	"	"	"	2022	"	S	"	"	"	"	"	"	"	"	"	"
2010	"	S	"	"	2-#E	"	"	"	"	"	"	"	2023	"	S	"	"	"	"	"	"	"	"	"	"
2011	"	S	"	"	"	"	"	"	"	"	"	"	2024	"	S	"	"	"	"	"	"	"	"	"	"
2012	"	S	"	"	"	"	"	"	"	"	"	"													
CLASS H-7o																									
2025	11-1913	S	Wal.	3-3½"	2-#E	ET6	Yes	8½"cc	Flex.	Pneu.	R.B.	Yes	2030	10-1913	S	Wal.	3-3½"	2-#E	ET6	Yes	8½"cc	Flex.	Pneu.	R.B.	Yes
2026	"	S	"	"	"	"	"	"	"	"	"	"	2031	11-1913	S	"	"	"	"	"	"	"	"	"	"
2027	"	S	"	"	"	"	"	"	"	"	"	"	2032	"	S	"	"	"	"	"	"	"	"	"	"
2028	"	S	"	"	"	"	"	"	"	"	"	"	2033	"	S	"	"	"	"	"	"	"	"	"	"
2029	10-1913	S	"	"	"	"	"	"	"	"	"	"	2034	10-1913	S	"	"	"	"	"	"	"	"	"	"

M.C.R.R.

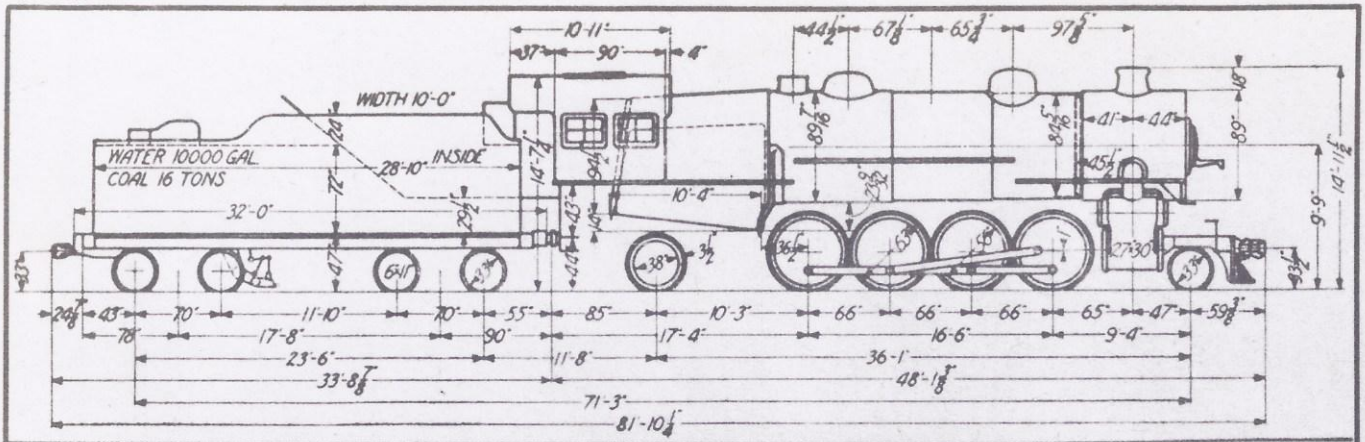

Built by the American Locomotive Co. Schenectady Works.	Kind of main valve 16 in. Piston	Weight on front truck working order 26500 lbs.
Builder's order No. S-1331	Firebox length, inside 114⅛ in.	Weight on drivers working order 246000 lbs.
	Firebox width, inside 75¼ in.	Weight on rear truck working order 55500 lbs.
	Grate area 59.6 sq. ft.	Total weight of engine working order 328000 lbs.
Number of Locomotives 10	Tubes, number large 45-5⅜ in.	Weight of tender, loaded 187600 lbs.
Note:- All locos. are equipped with "Duplex" stokers, "Ragonnet" type "B" reverse gears, F.R.S.Co. Unit safety bar, adjustable wedges & radial buffer.	Tubes, number small 281-2 in.	Weight of tender, empty 71400 lbs.
	Tubes, length over sheets 21 ft. 0 in.	Steam pressure 200 lbs.
Rating 59 %	Heating surface tubes 4400 sq. ft.	Max. tractive force 59000 lbs.
Factor of adhesion 4.17	Heating surface firebox and arch tubes 250 sq. ft.	
	Total heating surface 4650 sq. ft.	
	Heating surface superheater 1163 sq. ft.	

CLASS H-7E

ENGINE NUMBER	DATE BUILT	SUPERHEAT.	VALVE GEAR	SAFETY VALVES	INJECTORS	ENGINEERS BRAKE VALVE EQUIPMENT	STEAM HEAT AIR SIGNAL	AIR PUMP	STAYBOLTS	FIREDOORS	TENDER TRUCKS	WATER SCOOP	ENGINE NUMBER	DATE BUILT	SUPERHEAT	VALVE GEAR	SAFETY VALVES	INJECTORS	ENGINEERS BRAKE VALVE EQUIPMENT	STEAM HEAT AIR SIGNAL	AIR PUMP	STAYBOLTS	FIREDOORS	TENDER TRUCKS	WATER SCOOP
2060	11-1920	S	Wal.	3-3½"	2-A"11	ET6	Yes	8½"CC	BZ	Pneu.	RB	Yes	2065	11-1920	S	Wal.	3-3½"	2-A"11	ET6	Yes	8½"CC	BZ	Pneu.	RB	Yes
2061	"	S	"	"	"	"	"	"	"	"	"	"	2066	"	S	"	"	"	"	"	"	"	"	"	"
2062	"	S	"	"	"	"	"	"	"	"	"	"	2067	"	S	"	"	"	"	"	"	"	"	"	"
2063	"	S	"	"	"	"	"	"	"	"	"	"	2068	"	S	"	"	"	"	"	"	"	"	"	"
2064	"	S	"	"	"	"	"	"	"	"	"	"	2069	"	S	"	"	"	"	"	"	"	"	"	"

Old MCRR No's 7960-7969

62297- 62306

M.C.R.R.

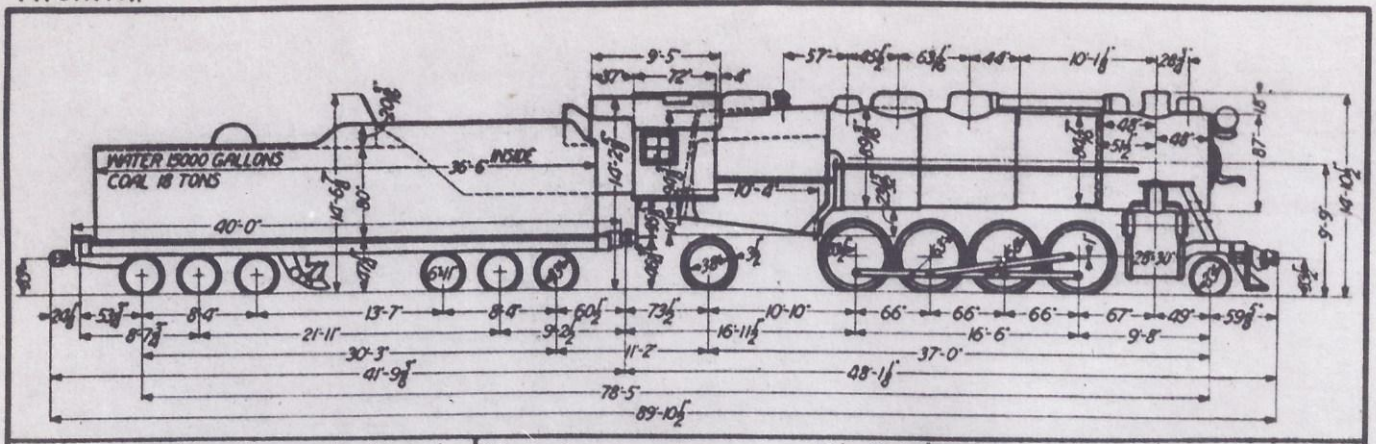

Built by the Lima Locomotive Works, Inc.	Kind of main valve ..... 14 in. Piston	Weight on front truck working order ..... 30000 lbs.
	Firebox length, inside ..... 114⅞ in.	Weight on drivers working order ..... 245500 lbs.
Builder's order No. L-1027	Firebox width, inside ..... 84¼ in.	Weight on rear truck working order ..... 58500 lbs.
Engine is equipped with Duplex Type D-2	Grate area ..... 66.4 sq. ft.	Total weight of engine working order ..... 334000 lbs.
stoker and F.R.S. Co., locomotive booster	Tubes, number large ..... 253-3⅝ in.	Weight of tender, loaded ..... 270000 lbs.
Number of Locomotives 1	Tubes, number small ..... —	Weight of tender, empty ..... 109000 lbs.
Engine also equipped with "Elesco" feed water	Tubes, length over sheets ..... 20 ft. 0 in.	Steam pressure ..... 200 lbs.
heater, type "E" superheater, adjustable	Heating surface tubes ..... 4287 sq. ft.	Max. tractive force ..... 63500 lbs.
driving box wedges, grate shaker, unit safety	Heating surface firebox and arch tubes ..... 291 sq. ft.	
drawbar and Precision type "D" reverse gear.	Total heating surface ..... 4578 sq. ft.	
Rating 63.5% - With booster 74.5%	Heating surface superheater 1782 sq. ft.	
Factor of adhesion 3.87		

CLASS H-10

ENGINE NUMBER	DATE BUILT	SUPERHEAT.	VALVE GEAR	SAFETY VALVES	INJECTORS	ENGINEERS BRAKE VALVE EQUIPMENT	STEAM HEAT AIR SIGNAL	AIR PUMP	STAYBOLTS	FIREDOORS	TENDER TRUCKS	WATER SCOOP	ENGINE NUMBER	DATE BUILT	SUPERHEAT.	VALVE GEAR	SAFETY VALVES	INJECTORS	ENGINEERS BRAKE VALVE EQUIPMENT	STEAM HEAT AIR SIGNAL	AIR PUMP	STAYBOLTS	FIREDOORS	TENDER TRUCKS	WATER SCOOP
2090	5-1922	S	B.	3-3½"	1-#11	ET6	Yes	8½"cc	Flex.	Pneu	SB	Yes													

Built as MCRR 8000
Renumbered " , 370

C.C.C. & St. L.

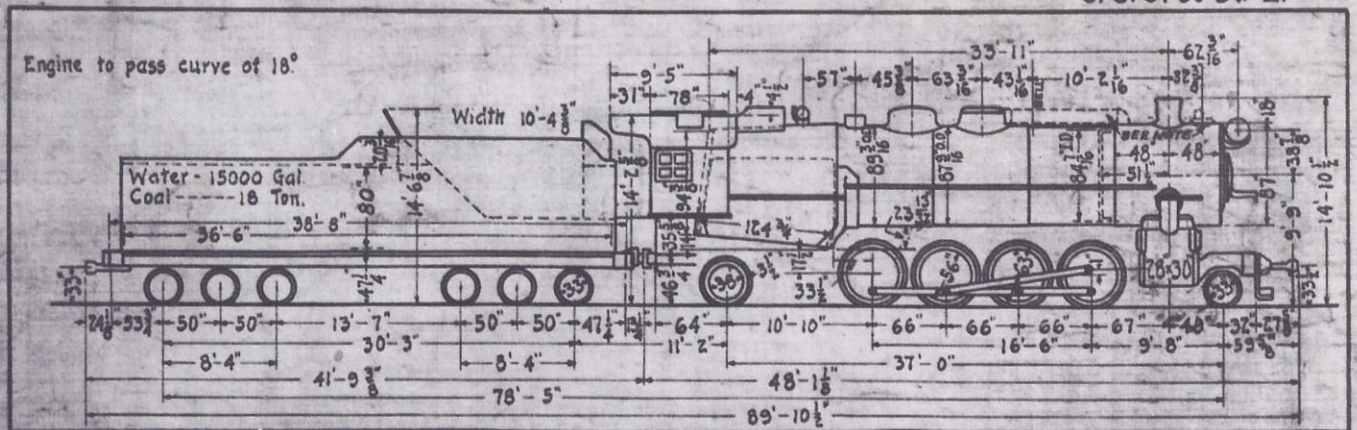

Built by the American Locomotive Co. Schenectady Works.	Kind of main valve ..... 14 in. piston	Weight on front truck working order ..... 30400 lbs.
Builder's order No. 1 T065 L-1038 97 to 182 — 5-1403 All others - 5-1393	Firebox length, inside ..... 114 1/8 in.	Weight on drivers working order ..... 252500 lbs.
Number of Locomotives - 78 M.C. A2 LOCOS.	Firebox width, inside ..... 84 1/4 in.	Weight on rear truck working order ..... 59600 lbs.
Notes * Indicates with Booster. SEE PATH SHEET FOR LOCOS WITHOUT FIRE BRICK TUBES AND CHAMBERS THROUGH	Grate area ..... 66.4 sq. ft.	Total weight of engine working order ..... 342500 lbs.
Rating 63.5 % and * 74.5 %	Tubes, number large ..... 245-3 1/4 in.	Weight of tender, loaded ..... 276000 lbs.
Factor of adhesion - 3.38	Tubes, number small	Weight of tender, empty ..... 115000 lbs.
	Tubes, length over sheets ..... 20 ft-0 in.	Steam pressure ..... 200 lbs.
	Heating surface tubes ..... 4158 sq. ft.	Max. tractive force ..... * 74470 lbs. 63470 lbs.
	Heating surface firebox and arch tubes ..... 257 sq. ft.	
	Total heating surface ..... 4415 sq. ft.	
	Heating surface superheater 1780 sq. ft.	

Class H-10-A

C.C.C. & S.T.L

ENGINE NUMBER	DATE BUILT	SUPERHEATER	VALVE GEAR	SAFETY VALVES	INJECTORS	ENGRS. BRAKE VALVE EQUIP.	STEAM HEAT AIR SIGNAL	AIR PUMP	STAYBOLTS	TENDER TRUCKS	BOOSTER	STOKER	REVERSE GEAR
1	1922	S	B	3-3½	1-"11	6E.T.	NO	2-8½"	Flex	Com.	C-1	D-2	Preec.
4	"	"	"	"	"	"	"	"	"	"	"	"	"
5	"	"	"	"	"	"	"	"	"	"	"	"	"
6	"	"	"	"	"	"	"	"	"	"	"	"	"
9	"	"	"	"	"	"	"	"	"	"	"	"	"
11	"	"	"	"	"	"	"	"	"	"	"	"	"
13	"	"	"	"	"	"	"	"	"	"	"	"	"
14	"	"	"	"	"	"	"	"	"	"	"	"	"
15	"	"	"	"	"	"	"	"	"	"	"	"	"
2120	"	"	"	"	"	"	"	"	"	"	"	"	"

ENGINE NUMBER	DATE BUILT	SUPERHEATER	VALVE GEAR	SAFETY VALVES	INJECTORS	ENGRS. BRAKE VALVE EQUIP.	STEAM HEAT AIR SIGNAL	AIR PUMP	STAYBOLTS	TENDER TRUCKS	BOOSTER	STOKER	REVERSE GEAR
24	1923	S	B	3-3½	1-"11	6E.T.	NO	2-8½"	Flex	Com.	C-1	D-2	Preec.
25 2125	"	"	"	"	"	"	"	"	"	"	"	"	"
28	"	"	"	"	"	"	"	"	"	"	"	"	"
29	"	"	"	"	"	"	"	"	"	"	"	"	"
31	"	"	"	"	"	"	"	"	"	"	"	"	"
32	"	"	"	"	"	"	"	"	"	"	"	"	"
34	"	"	"	"	"	"	"	"	"	"	"	"	"
42	"	"	"	"	"	"	"	"	"	"	"	"	"
48	"	"	"	"	"	"	"	"	"	"	"	"	"
50 2150	"	"	"	"	"	"	"	"	"	"	"	"	"
65	"	"	"	"	"	"	"	"	"	"	"	"	"
67 2167	"	"	"	"	"	"	"	"	"	"	"	"	"
70	"	"	"	"	"	"	"	"	"	"	"	"	"
81	"	"	"	"	"	"	"	"	"	"	"	"	"
97	"	"	"	"	"	"	"	"	"	"	"	"	"
108	"	"	"	"	"	"	"	"	"	"	"	"	"
109	"	"	"	"	"	"	"	"	"	"	"	"	"
110	"	"	"	"	"	"	"	"	"	"	"	"	"

* M.C LOCOS.
10

ALL LOCO'S EQUIPPED MULTIPLE THROTTLE

CLASS H10

C.C.C.&STL

ENGINE NUMBER	DATE BUILT	SUPERHEATER	VALVE GEAR	SAFETY VALVES	INJECTORS	ENGRS. BRAKE VALVE EQUIP.	STEAM HEAT AIR SIGNAL	AIR PUMP	STAYBOLTS	TENDER TRUCKS	BOOSTER	STOKER	REVERSE GEAR	ENGINE NUMBER	DATE BUILT	SUPERHEATER	VALVE GEAR	SAFETY VALVES	INJECTORS	ENGRS. BRAKE VALVE EQUIP.	STEAM HEAT AIR SIGNAL	AIR PUMP	STAYBOLTS	TENDER TRUCKS	BOOSTER	STOKER	REVERSE GEAR
133	1922	S	B	3-3½	1"11	6ET	No	28½CC	Flex	Com	C-1	D-2	Prec	153	1922	S	B	3-3½	1"11	6ET	No	28½CC	Flex	Com	C-1	D-2	Prec
134	"	"	"	"	"	"	"	"	"	"	"	"	"	154	"	"	"	"	"	"	"	"	"	"	"	"	"
135	"	"	"	"	"	"	"	"	"	"	"	"	"	155	"	"	"	"	"	"	"	"	"	"	"	"	"
136	"	"	"	"	"	"	"	"	"	"	"	"	"	156	"	"	"	"	"	"	"	"	"	"	"	"	"
137	"	"	"	"	"	"	"	"	"	"	"	"	"	157	"	"	"	"	"	"	"	"	"	"	"	"	"
138	"	"	"	"	"	"	"	"	"	"	"	"	"	158	1923	"	"	"	"	"	"	"	"	"	"	"	"
139	"	"	"	"	"	"	"	"	"	"	"	"	"	159	"	"	"	"	"	"	"	"	"	"	"	BK	"
140	"	"	"	"	"	"	"	"	"	"	"	"	"	160	"	"	"	"	"	"	"	"	"	"	"	D-2	"
141	"	"	"	"	"	"	"	"	"	"	"	"	"	161	"	"	"	"	"	"	"	"	"	"	"	"	"
142	"	"	"	"	"	"	"	"	"	"	"	"	"	162	"	"	"	"	"	"	"	"	"	"	"	"	"
143	"	"	"	"	"	"	"	"	"	"	"	"	"	163	"	"	"	"	"	"	"	"	"	"	"	"	"
144	"	"	"	"	"	"	"	"	"	"	"	"	"	164	"	"	"	"	"	"	"	"	"	"	"	"	"
145	"	"	"	"	"	"	"	"	"	"	"	"	"	165	"	"	"	"	"	"	"	"	"	"	"	"	"
146	"	"	"	"	"	"	"	"	"	"	"	"	"	166	"	"	"	"	"	"	"	"	"	"	"	"	"
147	"	"	"	"	"	"	"	"	"	"	"	"	T.D.C.	167	"	"	"	"	"	"	"	"	"	"	"	"	"
148	"	"	"	"	"	"	"	"	"	"	"	"	Prec	168	"	"	"	"	"	"	"	"	"	"	"	"	"
149	"	"	"	"	"	"	"	"	"	"	"	"	"	169	"	"	"	"	"	"	"	"	"	"	"	BK	"
150	1923	"	"	"	"	"	"	"	"	"	"	"	"	170	"	"	"	"	"	"	"	"	"	"	"	D-2	"
151	1922	"	"	"	"	"	"	"	"	"	"	"	"	171	"	"	"	"	"	"	"	"	"	"	"	"	"
152	"	"	"	"	"	"	"	"	"	"	"	"	"	172	"	"	"	"	"	"	"	"	"	"	"	"	"

41 →

Nos. 153 Mc Locos

CLASS H-10A

ENGINE NUMBER	DATE BUILT	SUPERHEATER	VALVE GEAR	SAFETY VALVES	INJECTORS	ENGRS. BRAKE VALVE EQUIP.	STEAM HEAT AIR SIGNAL	AIR PUMP	STAYBOLTS	TENDER TRUCKS	BOOSTER	STOKER	REVERSE GEAR	ENGINE NUMBER	DATE BUILT	SUPERHEATER	VALVE GEAR	SAFETY VALVES	INJECTORS	ENGRS. BRAKE VALVE EQUIP.	STEAM HEAT AIR SIGNAL	AIR PUMP	STAYBOLTS	TENDER TRUCKS	BOOSTER	STOKER	REVERSE GEAR
173	1923	S	B	3-3½	1"71	6ET	No	28½CC	Flex	Com	G-1	D-2	Preg	178	1923	S	B	3-3½	1"71	6ET	No	28½CC	Flex	Com	G-1	D-2	Preg
174	"	"	"	"	"	"	"	"	"	"	"	"	"	179	2279												
175	"	"	"	"	"	"	"	"	"	"	"	"	"	180	"	"	"	"	"	"	"	"	"	"	"	"	"
176	"	"	"	"	"	"	"	"	"	"	"	"	"	181	"	"	"	"	"	"	"	"	"	"	"	"	"
177	"	"	"	"	"	"	"	"	"	"	"	"	"	182	"	"	"	"	"	"	"	"	"	"	"	"	"

275 → 175

179 → 2279

FOLLOWING LOCO'S EQUIPPED WITH OUTSIDE DRY PIPE AND CHAMBER THROTTLE
141, 146, 149, 150, 159, 169, 170, 177, 180
REMAINING LOCO'S EQUIPPED WITH MULTIPLE THROTTLES

#175 & 179 P.M.C. Locos.

Engine designed for 18°-0′ curve.

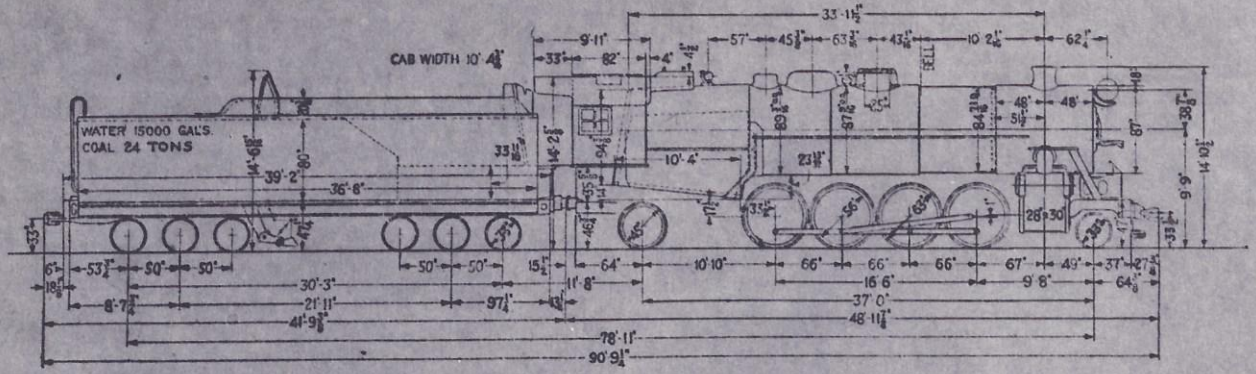

Class	Order No.	Built By	Engine Nos.	No. of Locos.
H-10A	S-1393	A.L. Co.	2172	1
	S-1403		2186	1

Rating, Engine, 63.5%
Rating, Engine and Booster, 74.5%

Kind of main valve	14 in. piston
Firebox, length inside	114⅛ in.
Firebox, width inside	84¼ in.
Grate area	66.4 sq. ft.
Tubes, number large	247 3¼ in.
Tubes, number small	6 2¼ in.
Tubes, length over sheets	20 ft. 0 in.
Heating surface tubes	4255.6 sq. ft.
Heating surface firebox and arch tubes	257 Sq. ft.
Total heating surface	4512.6 Sq ft.
Heating surface, superheater	1780 sq. ft.
Weight on front Truck, working order	304001bs.
Weight on Drivers, working order	252500 lbs.
Weight on rear Truck, working order	59600 lbs.
Total weight of Engine, working order	342500 lbs.
Weight of Tender, loaded	291500 lbs.
Weight of Tender, empty	118500 lbs.
Steam Pressure	200 lbs.
Max. Tractive Force, Engine	63470 lbs.
Tractive Force Booster	11000 lbs.
Combined Tractive Force, Engine and Booster	74470 lbs.

ENGINE NUMBER	DATE BUILT	SUPERHEAT.	VALVE GEAR	SAFETY VALVES	INJECTORS	ENGINEERS BRAKE VALVE EQUIPMENT	STEAM HEAT AIR SIGNAL	AIR PUMP	STAYBOLTS	FIREDOORS	TENDER TRUCKS	WATER SCOOP	ENGINE NUMBER	DATE BUILT	SUPERHEAT.	VALVE GEAR	SAFETY VALVES	INJECTORS	ENGINEERS BRAKE VALVE EQUIPMENT	STEAM HEAT AIR SIGNAL	AIR PUMP	STAYBOLTS	FIREDOORS	TENDER TRUCKS	WATER SCOOP
		S	B	3-3 1/16"	# 11	H-6	ND	2-8 1/2 CC	B.Z.	PNEU	S-B	YES													
2172	1-1923	"	"	"	"	"	"	"	"	"	"	"													
2186	2-1923	"	"	"	"	"	"	"	"	"	"	"													

CLASS H10A.

M. C. R. R.

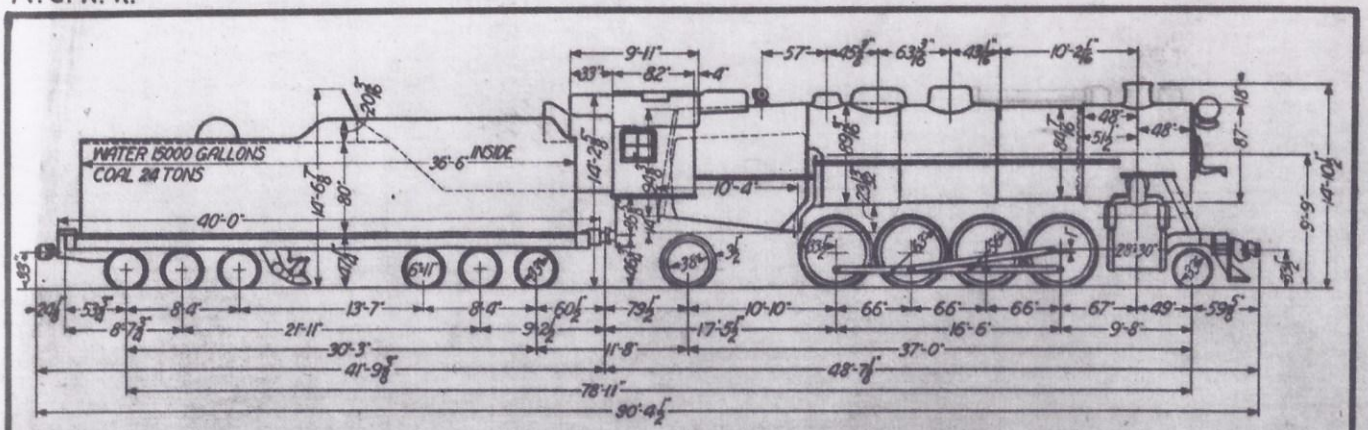

Built by the American Locomotive Co. Schenectady Works.	Kind of main valve ... 1 Rin. Piston	Weight on front truck working order ... 30800 lbs.
Builder's order No. S-1403	Firebox length, inside ... 114⅛ in.	Weight on drivers working order ... 252100 lbs.
Engines designed for 18°: 0' curve	Firebox width, inside ... 84½ in.	Weight on rear truck working order ... 58700 lbs.
Leased	Grate area ... 66.4 sq. ft.	Total weight of engine working order ... 341600 lbs.
Number of Locomotives 5	Tubes, number large ... 247-2 in.	Weight of tender, loaded 291500 lbs.
Engines equipped with D-2 stokers, F.R.S.Co. booster, adj. wedges, unit safety bar and Precision reverse gear also "Elesco" F.W.H. and type "E" superheater and mul. throttle	Tubes, number small ... 6-2 in.	Weight of tender, empty ... 118500 lbs.
Rating 63.5% with booster ... 75%	Tubes, length over sheets ... 20 ft. 0 in.	Steam pressure ... 200 lbs.
Factor of adhesion ... 3.97	Heating surface tubes ... 4255.6 sq. ft.	Max. tractive force ... 69470 lbs.
	Heating surface firebox and arch tubes ... 257 sq. ft.	
	Total heating surface ... 4512.6 sq. ft.	
	Heating surface superheater 1780 sq. ft.	

CLASS H-10a

ENGINE NUMBER	DATE BUILT	SUPERHEAT.	VALVE GEAR	SAFETY VALVES	INJECTORS	ENGINEERS BRAKE VALVE EQUIPMENT	STEAM HEAT AIR SIGNAL	AIR PUMP	STAYBOLTS	FIREDOORS	TENDER TRUCKS	WATER SCOOP	ENGINE NUMBER	DATE BUILT	SUPERHEAT.	VALVE GEAR	SAFETY VALVES	INJECTORS	ENGINEERS BRAKE VALVE EQUIPMENT	STEAM HEAT AIR SIGNAL	AIR PUMP	STAYBOLTS	FIREDOORS	TENDER TRUCKS	WATER SCOOP
2218	3-1923	S	B.	3-3½"	1-#11	ET6	No	2-8½"	Flex.	Pneu	SB	Yes													
2219	"	S	"	"	"	"	"	"	"	"	"	"													
2220	"	S	"	"	"	"	"	"	"	"	"	"													
2221	"	S	"	"	"	"	"	"	"	"	"	"													
2222	"	S	"	"	"	"	"	"	"	"	"	"													

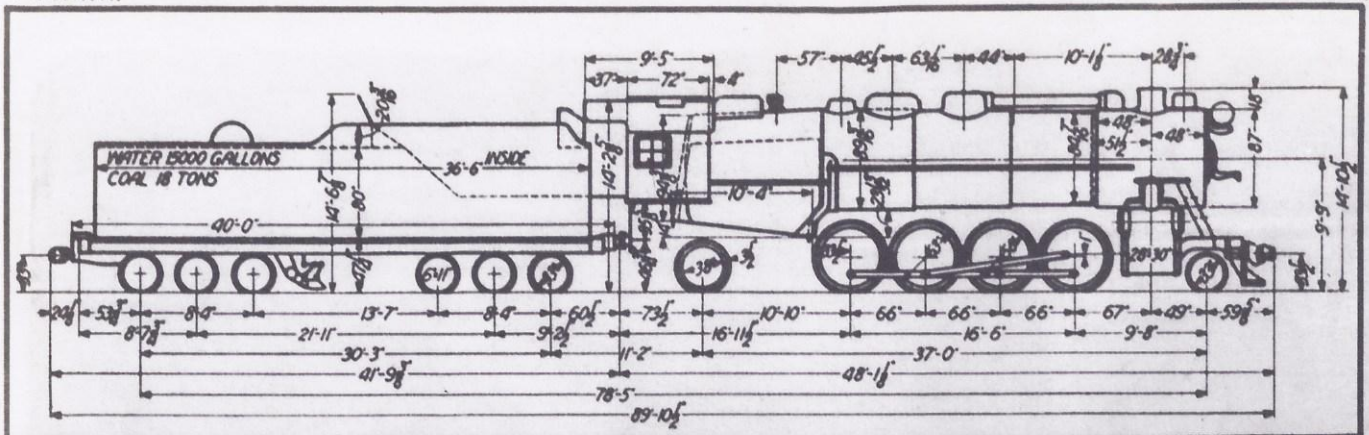

Built by the Lima Locomotive Works, Inc.	**Kind of main valve** 14 in. Piston.	**Weight on front truck working order** 29000. lbs.
Builder's order No. L-1038	**Firebox length, inside** 114⅞ in.	**Weight on drivers working order** 248000. lbs.
Engines are equipped with Elvin stokers and F.R.S. Co. locomotive boosters.	**Firebox width, inside** 84⅞ in.	**Weight on rear truck working order** 58000. lbs.
Number of Locomotives 10	**Grate area** 66.4 sq.ft.	**Total weight of engine working order** 335000. lbs.
Engines also equipped with "Elesco" feed water heater, type "E" superheater, adjustable driving box wedges, grate shakers, unit safety drawbar and Precision type "D" reverse gear.	**Tubes, number large** 252 - 2¼ in.	**Weight of tender, loaded** 270000. lbs.
Rating 63.5% - With booster 74.5%	**Tubes, number small** ———	**Weight of tender, empty** 109000. lbs.
Factor of adhesion 3.90	**Tubes, length over sheets** 20 ft. 0 in.	**Steam pressure** 200. lbs.
	Heating surface tubes 4287. sq. ft.	**Max. tractive force** 63500. lbs.
	Heating surface firebox and arch tubes 291. sq. ft.	
	Total heating surface 4578. sq. ft.	
	Heating surface superheater 1780. sq. ft.	

ENGINE NUMBER	DATE BUILT	SUPERHEAT.	VALVE GEAR	SAFETY VALVES	INJECTORS	ENGINEERS BRAKE VALVE EQUIPMENT	STEAM HEAT AIR SIGNAL	AIR PUMP	STAYBOLTS	FIREDOORS	TENDER TRUCKS	WATER SCOOP	ENGINE NUMBER	DATE BUILT	SUPERHEAT.	VALVE GEAR	SAFETY VALVES	INJECTORS	ENGINEERS BRAKE VALVE EQUIPMENT	STEAM HEAT AIR SIGNAL	AIR PUMP	STAYBOLTS	FIREDOORS	TENDER TRUCKS	WATER SCOOP
2223	2-1923	S	B.	3-3½"	1-#11	ET6	No	8½"cc	Flex.	Pneu	SB	Yes	2228	2-1923	S	B.	3-3½"	1-#11	ET6	No	8½"cc	Flex.	Pneu	SB	Yes
2224	"	S	"	"	"	"	"	"	"	"	"	"	2229	"	S	"	"	"	"	"	"	"	"	"	"
2225	"	S	"	"	"	"	"	"	"	"	"	"	2230	"	S	"	"	"	"	"	"	"	"	"	"
2226	"	S	"	"	"	"	"	"	"	"	"	"	2231	"	S	"	"	"	"	"	"	"	"	"	"
2227	"	S	"	"	"	"	"	"	"	"	"	"	2232	"	S	"	"	"	"	"	"	"	"	"	"

Former No's 123 to 132

M.C.R.R.

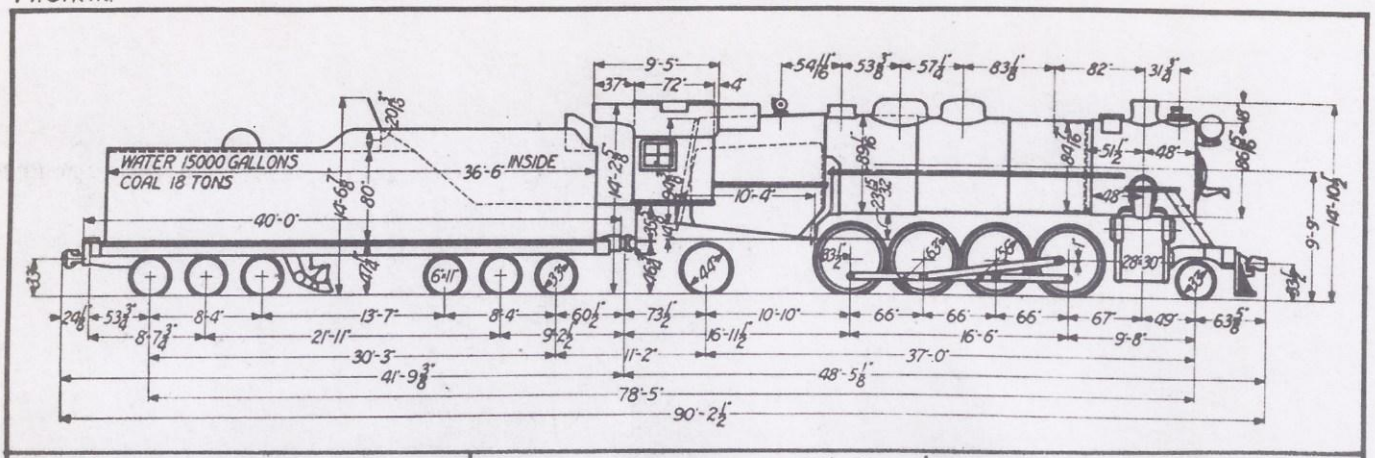

Built by the *Lima Locomotive Works, Inc.*	**Kind of main valve** *19 in. Piston*	**Weight on front truck working order** *32200 lbs.*
	Firebox length, inside *114 1/8 in.*	
Builder's order No. *L-1065*	**Firebox width, inside** *84 1/4 in.*	**Weight on drivers working order** *244600 lbs.*
Engines are equipped with Duplex Type D-2	**Grate area** *66.4 sq. ft.*	
stokers and F.R.S. Co., locomotive booster	**Tubes, number large** *192-3 1/2 in.*	**Weight on rear truck working order** *57600 lbs.*
Number of Locomotives *15*	**Tubes, number small** *53-2 1/4 in.*	
Engines also equipped with "Elesco" feed water	**Tubes, length over sheets** *20 ft. 0 in.*	**Total weight of engine working order** *334500 lbs.*
heater and Type "E" superheater, also adjustable	**Heating surface tubes** *4122 sq. ft.*	
driving box wedges, grate shakers, unit safety	**Heating surface firebox and arch tubes** *253 sq. ft.*	**Weight of tender, loaded** *270000 lbs.*
draw bar and Precision Type "D" reverse gear.		**Weight of tender, empty** *109000 lbs.*
Rating *63.5% - With booster 74.7%*	**Total heating surface** *4375 sq. ft.*	**Steam pressure** *200 lbs.*
Factor of adhesion *3.85*	**Heating surface superheater** *1970 sq. ft.*	**Max. tractive force** *63500 lbs.*

CLASS H-10B

ENGINE NUMBER	DATE BUILT	SUPERHEAT.	VALVE GEAR	SAFETY VALVES	INJECTORS	ENGINEERS BRAKE VALVE EQUIPMENT	STEAM HEAT AIR SIGNAL	AIR PUMP	STAYBOLTS	FIREDOORS	TENDER TRUCKS	WATER SCOOP	ENGINE NUMBER	DATE BUILT	SUPERHEAT.	VALVE GEAR	SAFETY VALVES	INJECTORS	ENGINEERS BRAKE VALVE EQUIPMENT	STEAM HEAT AIR SIGNAL	AIR PUMP	STAYBOLTS	FIREDOORS	TENDER TRUCKS	WATER SCOOP
2081	8-1924	S	B.	3-3½"	1-#11	ET6	No	12½"x8½"x12	Flex.	Pneu	SB	Yes	2377	6-1924	S	B.	3-3½"	1-#11	ET6	No	12½"x8½"x12	Flex.	Pneu	SB	Yes
2083	"	S	"	"	"	"	"	"	"	"	"	"	2379	"	S	"	"	"	"	"	"	"	"	"	"
2084	"	S	"	"	"	"	"	"	"	"	"	"	2380	7-1924	S	"	"	"	"	"	"	"	"	"	"
2085	"	S	"	"	"	"	"	"	"	"	"	"	2381	"	S	"	"	"	"	"	"	"	"	"	"
2086	"	S	"	"	"	"	"	"	"	"	"	"	2383	"	S	"	"	"	"	"	"	"	"	"	"
2087	"	S	"	"	"	"	"	"	"	"	"	"	2384	"	S	"	"	"	"	"	"	"	"	"	"
2088	"	S	"	"	"	"	"	"	"	"	"	"	2387	"	S	"	"	"	"	"	"	"	"	"	"
2089	"	S	"	"	"	"	"	"	"	"	"	"	2388	"	S	"	"	"	"	"	"	"	"	"	"
2360	6-1924	S	"	"	"	"	"	"	"	"	"	"	2390	"	S	"	"	"	"	"	"	"	"	"	"
2363	"	S	"	"	"	"	"	"	"	"	"	"	2391	"	S	"	"	"	"	"	"	"	"	"	"
2365	"	S	"	"	"	"	"	"	"	"	"	"	2392	"	S	"	"	"	"	"	"	"	"	"	"
2367	"	S	"	"	"	"	"	"	"	"	"	"	2393	"	S	"	"	"	"	"	"	"	"	"	"
2368	"	S	"	"	"	"	"	"	"	"	"	"	2394	"	S	"	"	"	"	"	"	"	"	"	"
2372	"	S	"	"	"	"	"	"	"	"	"	"	2395	"	S	"	"	"	"	"	"	"	"	"	"
2373	"	S	"	"	"	"	"	"	"	"	"	"	2396	"	S	"	"	"	"	"	"	"	"	"	"
2374	"	S	"	"	"	"	"	"	"	"	"	"	2398	"	S	"	"	"	"	"	"	"	"	"	"
2375	"	S	"	"	"	"	"	"	"	"	"	"	2399	"	S	"	"	"	"	"	"	"	"	"	"
2376	"	S	"	"	"	"	"	"	"	"	"	"													

Following Locomotive has had Duplex Stoker removed and replaced with LT-2. Standard Stoker. 2087.

ENGINE NUMBER	DATE BUILT	SUPERHEAT.	VALVE GEAR	SAFETY VALVES	INJECTORS	ENGINEERS BRAKE VALVE EQUIPMENT	STEAM HEAT AIR SIGNAL	AIR PUMP	STAYBOLTS	FIREDOORS	TENDER TRUCKS	WATER SCOOP	ENGINE NUMBER	DATE BUILT	SUPERHEAT.	VALVE GEAR	SAFETY VALVES	INJECTORS	ENGINEERS BRAKE VALVE EQUIPMENT	STEAM HEAT AIR SIGNAL	AIR PUMP	STAYBOLTS	FIREDOORS	TENDER TRUCKS	WATER SCOOP
2325	8-1924	S	B.	3-3½"	1-#11	H-6	No	10½"	Flex.	Pneu	SB	Yes	2344	8-1924	S	B.	3-3½"	1-#11	ET6	No	10½"	Flex.	Pneu	SB	Yes
2337	"	S	"	"	"	ET6	"	"	"	"	"	"	2345	"	S	"	"	"	"	"	"	"	"	"	"
2338	"	S	"	"	"	"	"	"	"	"	"	"	2346	"	S	"	"	"	"	"	"	"	"	"	"
2339	"	S	"	"	"	"	"	"	"	"	"	"	2347	"	S	"	"	"	"	"	"	"	"	"	"
2340	"	S	"	"	"	"	"	"	"	"	"	"	2348	"	S	"	"	"	"	"	"	"	"	"	"
2341	"	S	"	"	"	"	"	"	"	"	"	"	2349	"	S	"	"	"	"	"	"	"	"	"	"
2342	"	S	"	"	"	"	"	"	"	"	"	"	2350	"	S	"	"	"	"	"	"	"	"	"	"
2343	"	S	"	"	"	"	"	"	"	"	"	"	2351	"	S	"	"	"	"	"	"	"	"	"	"

M.C.R.R.

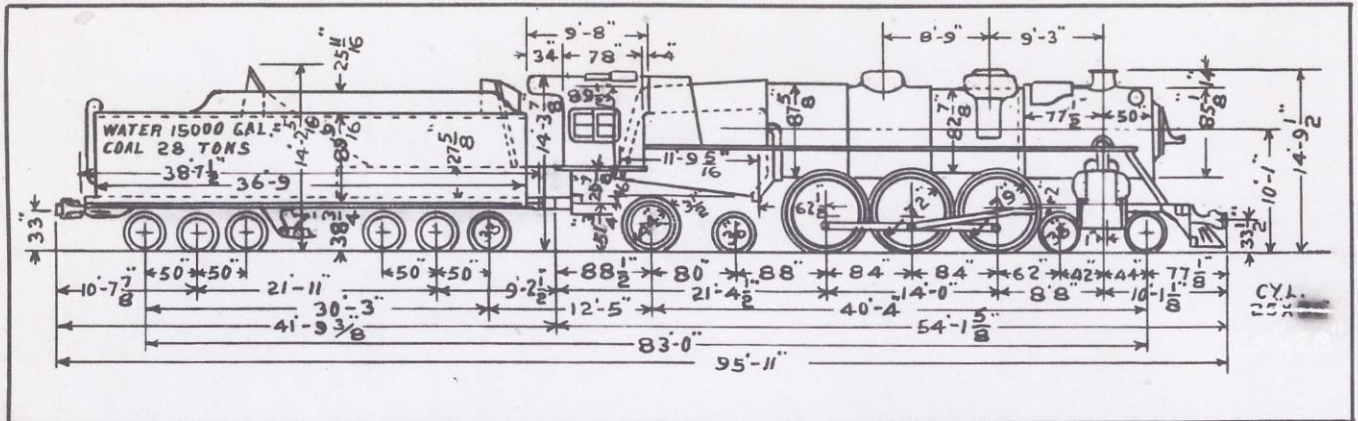

Built by the American Locomotive Co. Schenectady Works.		Kind of main valve	14 in Piston	Weight on front truck working order	64400 lbs
Builder's order No.	S-1596	Firebox length, inside	130 in	Weight on drivers working order	184800 lbs
All Engines are equipped with Elesco feed water heaters		Firebox width, inside	90 1/4 in	Weight on rear truck (F)	44800 lbs
Number of Locomotives	5	Grate area	81.5 sq. ft.	working order (B)	54000 lbs
Engines also equipped with booster, adj wedges, radial buffers, Precision reverse gear and multiple throttle.		Tubes, number large	201-3 1/8 in	Total weight of engine working order	348000 lbs
		Tubes, number small	35-2 1/4 in	Weight of tender, loaded	312700 lbs
Engines designed for 18° 30' curve		Tubes, length over sheets	20 ft. 6 in	Weight of tender, empty	132500 lbs
Rating. 42.4% With booster 53.3%		Heating surface tubes	4179 sq. ft.	Steam pressure	225 lbs
Factor of adhesion	4.36	Heating surface firebox and arch tubes	281 sq. ft.	Max. tractive force	42360 lbs
		Total heating surface	4460 sq. ft.		
		Heating surface superheater	1951 sq. ft		

CLASS J-1B

ENGINE NUMBER	DATE BUILT	SUPERHEAT.	VALVE GEAR	SAFETY VALVES	INJECTORS	ENGINEERS BRAKE VALVE EQUIPMENT	STEAM HEAT AIR SIGNAL	AIR PUMP	STAYBOLTS	FIREDOORS	TENDER TRUCKS	WATER SCOOP	ENGINE NUMBER	DATE BUILT	SUPERHEAT.	VALVE GEAR	SAFETY VALVES	INJECTORS	ENGINEERS BRAKE VALVE EQUIPMENT	STEAM HEAT AIR SIGNAL	AIR PUMP	STAYBOLTS	FIREDOORS	TENDER TRUCKS	WATER SCOOP
5345	11-1927	S	Wal.	3-3½"	1-#13	ET6D	Yes	2 1/8" x 8"	BZ	Pneu	SB	Yes													
5346	"	S	"	"	"	"	"	"	"	"	"	"													
5347	"	S	"	"	"	"	"	"	"	"	"	"													
5348	"	S	"	"	"	"	"	"	"	"	"	"													
5349	12-1927	S	"	"	"	"	"	"	"	"	"	"													

Old MCRR Nos. 8200-8204

"All engines except No. 5348 equipped with NT stokers"

No 5348 equipped with BK stoker.

Tenders equipped with Timkin roller bearings.

M.C.R.R.

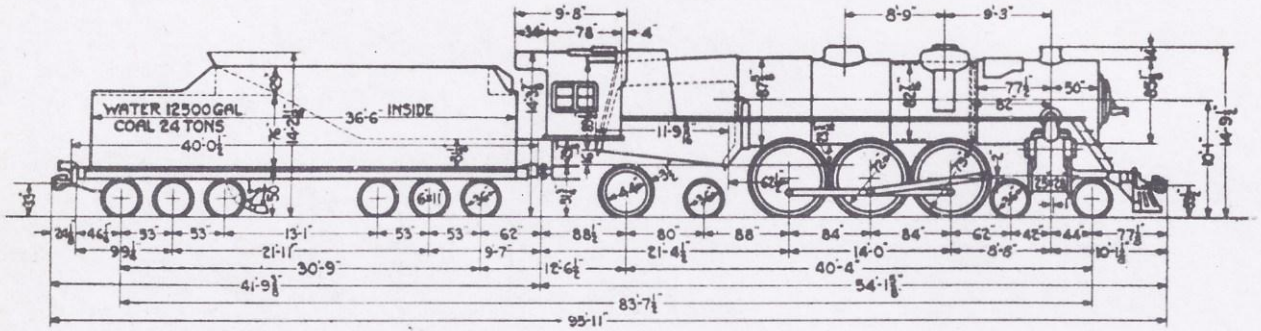

Built by the *American Locomotive Co.*	**Kind of main valve** *14 in. Piston*	**Weight on front truck working order** *63500 lbs.*
Schenectady **Works.**	**Firebox length, inside** *130 in.*	**Weight on drivers working order** *185000 lbs.*
Builder's order No. *S-1599*	**Firebox width, inside** *90¼ in.*	**Weight on rear truck working order** (F) *45000 lbs.* (B) *54000 lbs.*
All engines are equipped with "[illegible]" stokers and "Coffin" feed water heaters	**Grate area** *81.5 sq. ft.*	**Total weight of engine working order** *397500 lbs.*
Number of Locomotives *5*	**Tubes, number large** *201 3½ in.*	**Weight of tender, loaded** *281500 lbs.*
Engines also equipped with booster, adj. wedges, radial buffer, "Precision" reverse gear and multiple throttle.	**Tubes, number small** *35 2¼ in.*	**Weight of tender, empty** *128600 lbs.*
Engines designed for 18°-30' curve	**Tubes, length over sheets** *20 ft. 6 in.*	**Steam pressure** *225 lbs.*
Rating *42.4%* *With booster 53.3%*	**Heating surface tubes** *4172 sq. ft.*	**Max. tractive force** *92370 lbs.*
Factor of adhesion *4.37*	**Heating surface firebox and arch tubes** *281 sq. ft.*	
	Total heating surface *4460 sq. ft.*	
	Heating surface superheater *1951 sq. ft.*	

CLASS J-1B (C.S. DIV.)

ENGINE NUMBER	DATE BUILT	SUPERHEAT.	VALVE GEAR	SAFETY VALVES	INJECTORS	ENGINEERS BRAKE VALVE EQUIPMENT	STEAM HEAT AIR SIGNAL	AIR PUMP	STAYBOLTS	FIREDOORS	TENDER TRUCKS	WATER SCOOP	ENGINE NUMBER	DATE BUILT	SUPERHEAT.	VALVE GEAR	SAFETY VALVES	INJECTORS	ENGINEERS BRAKE VALVE EQUIPMENT	STEAM HEAT AIR SIGNAL	AIR PUMP	STAYBOLTS	FIREDOORS	TENDER TRUCKS	WATER SCOOP
5350	11-1927	S	Wal.	3-3½"	1-#13	ET6D	Yes	20 6½"	BZ	Pneu	SB	Yes													
5351	"	S	"	"	"	"	"	"	"	"	"	"													
5352	12-1927	S	"	"	"	"	"	"	"	"	"	"													
5353	1-1928	S	"	"	"	"	"	"	"	"	"	"													
5354	"	S	"	"	"	"	"	"	"	"	"	"													

Old MCRR Nos 8205-8209

Bldrs Nos 67486-67490

M.C.R.R.

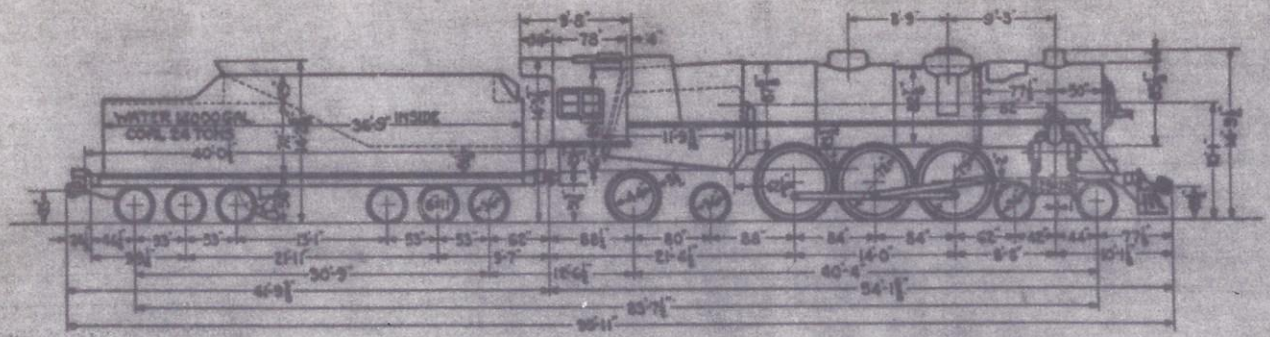

Built by the American Locomotive Co. Schenectady Works.	Kind of main valve ..... 14 in. Piston	Weight on front truck working order } 62500 lbs.
Builder's order No. 5-1687	Firebox length, inside ..... 130 in.	Weight on drivers working order } 188000 lbs.
All engines equipped with Com. Steel Co. water bottom tender frame.	Firebox width, inside ..... 90½ in.	Weight on rear truck working order } (F) 66000 lbs. (B) 55000 lbs.
Number of Locomotives 5	Grate area ..... 81.5 sq. ft.	Total weight of engine working order } 351500 lbs.
Engines equipped with ~~[illegible]~~ H.T., F.R.S.C. booster, adj. wedges & Precision rev. gear, "Collin" F.W.H. & L.S.Co. multiple throttle.	Tubes, number large ..... 201 : 3½ in.	Weight of tender, loaded 294600 lbs.
Engines designed for 18°-30' curve	Tubes, number small ..... 35 : 2¼ in.	Weight of tender, empty 131600 lbs.
Rating 22.4% with booster 53.3%	Tubes, length over sheets ..... 20 ft. 6 in.	Steam pressure ..... 225 lbs.
Factor of adhesion 4.88	Heating surface tubes ..... 4172 sq. ft.	Max. tractive force ..... 42360 lbs.
	Heating surface firebox and arch tubes ..... 281 sq. ft.	
	Total heating surface ..... 4460 sq. ft.	
	Heating surface superheater 1251 sq. ft.	

CLASS J-1c

ENGINE NUMBER	DATE BUILT	SUPERHEAT.	VALVE GEAR	SAFETY VALVES	INJECTORS	ENGINEERS BRAKE VALVE EQUIPMENT	STEAM HEAT AIR SIGNAL	AIR PUMP	STAYBOLTS	FIREDOORS	TENDER TRUCKS	WATER SCOOP	ENGINE NUMBER	DATE BUILT	SUPERHEAT.	VALVE GEAR	SAFETY VALVES	INJECTORS	ENGINEERS BRAKE VALVE EQUIPMENT	STEAM HEAT AIR SIGNAL	AIR PUMP	STAYBOLTS	FIREDOORS	TENDER TRUCKS	WATER SCOOP
5355	2-1929	S	B.	3-3½"	1-#13	ET6D	Yes	12½"x12"	BZ	Pneu	SB	Yes													
5356	1-1929	S	"	"	"	"	"	"	"	"	"	"													
5357	"	S	"	"	"	"	"	"	"	"	"	"													
5358	2-1929	S	"	"	"	"	"	"	"	"	"	"													
5359	"	S	"	"	"	"	"	"	"	"	"	"													

Old MCRR No's 8210-8214
Bldrs No's. 67737-67741

All Locomotives have had the Duplex Stoker removed and replaced with the HT. Standard Stoker.

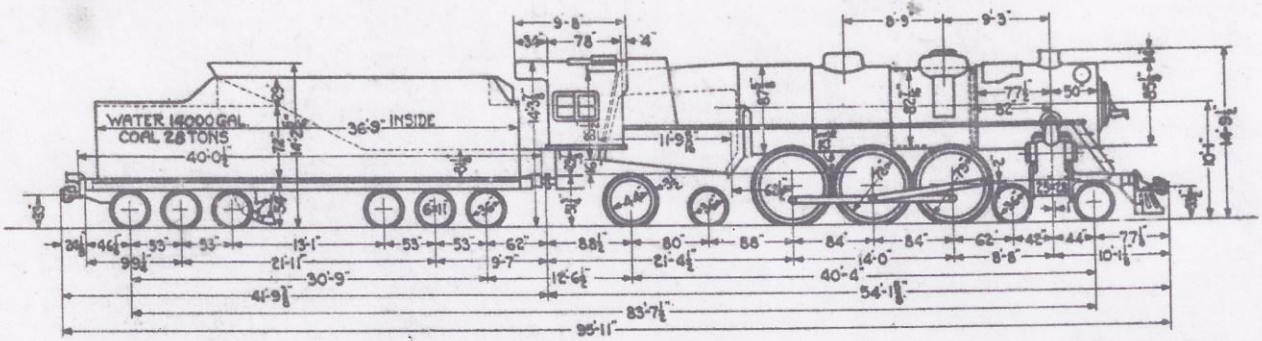

Built by the American Locomotive Co. Schenectady Works.	Kind of main valve ..... 14 in. Piston	Weight on front truck working order ..... 64500 lbs.
Builder's order No. S-1671	Firebox length, inside ..... 130 in.	Weight on drivers working order ..... 187000 lbs.
All engines equipped with Com. Steel Co. water bottom tender frame	Firebox width, inside ..... 90¼ in.	Weight on rear truck working order ..... (F) 45500 lbs. (B) 54500 lbs.
Number of Locomotives 15	Grate area ..... 81.5 sq. ft.	Total weight of engine working order ..... 351500 lbs.
Engines equipped with "B-K" stoker, F.R.S. Co. booster, adj. wedges & Precision rev. gear, "Elesco" F.W.H. & Sup. Co. multiple throttle.	Tubes, number large ..... 201 2¼ in.	Weight of tender, loaded ..... 308900 lbs.
Engines designed for 18°-30' curve.	Tubes, number small ..... 35 2¼ in.	Weight of tender, empty ..... 127300 lbs.
Rating 42.4% with booster 53.3%	Tubes, length over sheets ..... 20 ft. 6 in.	Steam pressure ..... 225 lbs.
Factor of adhesion 4.41	Heating surface tubes ..... 4179 sq. ft.	Max. tractive force ..... 42360 lbs.
Leased	Heating surface firebox and arch tubes ..... 281 sq. ft.	
	Total heating surface ..... 4460 sq. ft.	
	Heating surface superheater 1951 sq. ft.	

CLASS J-10

ENGINE NUMBER	DATE BUILT	SUPERHEAT.	VALVE GEAR	SAFETY VALVES	INJECTORS	ENGINEERS BRAKE VALVE EQUIPMENT	STEAM HEAT AIR SIGNAL	AIR PUMP	STAYBOLTS	FIREDOORS	TENDER TRUCKS	WATER SCOOP	ENGINE NUMBER	DATE BUILT	SUPERHEAT.	VALVE GEAR	SAFETY VALVES	INJECTORS	ENGINEERS BRAKE VALVE EQUIPMENT	STEAM HEAT AIR SIGNAL	AIR PUMP	STAYBOLTS	FIREDOORS	TENDER TRUCKS	WATER SCOOP
5360	12-1925	S	B.	3-3½"	1-#13	ET6D	Yes	12½"x10"	BZ	Pneu	SB	Yes	5368	12-1929	S	B.	3-3½"	1-#13	ET6D	Yes	12½"x10"	BZ	Pneu	SB	Yes
5361	"	S	"	"	"	"	"	"	"	"	"	"	5369	"	S	"	"	"	"	"	"	"	"	"	"
5362	"	S	"	"	"	"	"	"	"	"	"	"	5370	1-1930	S	"	"	"	"	"	"	"	"	"	"
5363	"	S	"	"	"	"	"	"	"	"	"	"	5371	"	S	"	"	"	"	"	"	"	"	"	"
5364	"	S	"	"	"	"	"	"	"	"	"	"	5372	"	S	"	"	"	"	"	"	"	"	"	"
5365	"	S	"	"	"	"	"	"	"	"	"	"	5373	"	S	"	"	"	"	"	"	"	"	"	"
5366	"	S	"	"	"	"	"	"	"	"	"	"	5374	"	S	"	"	"	"	"	"	"	"	"	"
5367	"	S	"	"	"	"	"	"	"	"	"	"													

Old M.C.R.R. Nos 8215-8229

68203 - 68217

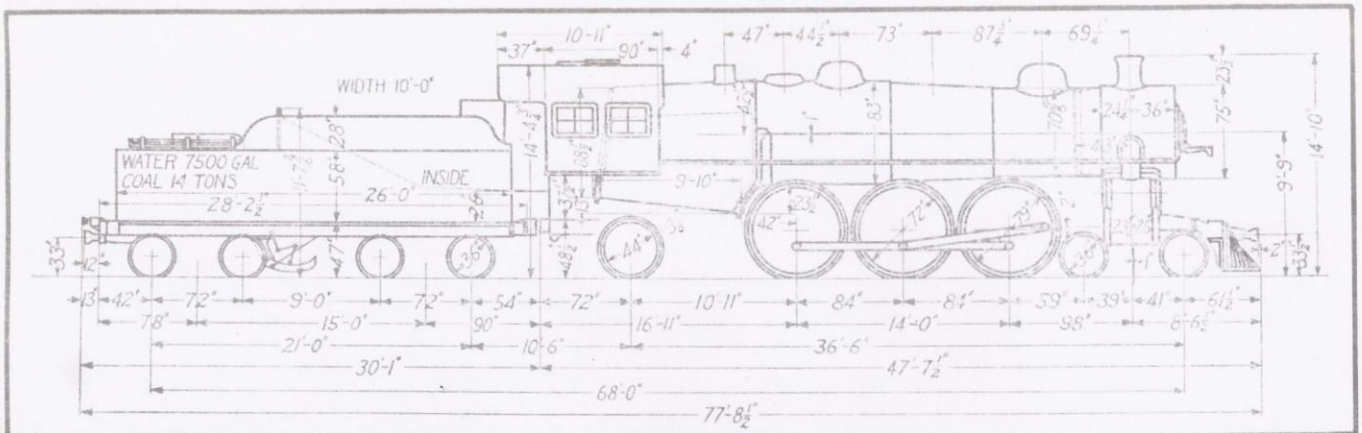

Built by the American Locomotive Co. Schenectady Works.		Kind of main valve	14 in. Piston.	Weight on front truck working order	50000 lbs.
Builder's order No. S-988		Firebox length, inside	108 1/8 in.	Weight on drivers working order	172500 lbs.
		Firebox width, inside	75 1/4 in.		
		Grate area	56.5 sq. ft.		
		Tubes, number large	32 - 5 3/8 in.	Weight on rear truck working order	50500 lbs.
Number of Locomotives	2	Tubes, number small	229 - 2 in.		
		Tubes, length over sheets	21 ft. 6 in.	Total weight of engine working order	273000 lbs.
		Heating surface tubes	3527.8 sq. ft.		
Note These engines are equipped with a radial buffer between engine and tender.		Heating surface firebox and arch tubes	229.2 sq. ft.	Weight of tender, loaded	161200 lbs.
				Weight of tender, empty	70700 lbs.
Rating 30.9%		Total heating surface	3757. sq. ft.	Steam pressure	200 lbs.
		Heating surface superheater	810. sq. ft.	Max. tractive force	30900 lbs.

CLASS K-3F

ENGINE NUMBER	DATE BUILT	SUPERHEAT.	VALVE GEAR	SAFETY VALVES	INJECTORS	ENGINEERS BRAKE VALVE EQUIPMENT	STEAM HEAT AIR SIGNAL	AIR PUMP	STAYBOLTS	FIREDOORS	TENDER TRUCKS	WATER SCOOP	ENGINE NUMBER	DATE BUILT	SUPERHEAT.	VALVE GEAR	SAFETY VALVES	INJECTORS	ENGINEERS BRAKE VALVE EQUIPMENT	STEAM HEAT AIR SIGNAL	AIR PUMP	STAYBOLTS	FIREDOORS	TENDER TRUCKS	WATER SCOOP
~~8300~~	~~9-1913~~	~~S~~	~~Wal.~~	~~2-3½"~~	~~2-#E~~	~~ET6D~~	~~Yes~~	~~8½"CC~~	~~Flex.~~	~~Pneu.~~	~~S.B.~~	~~Yes~~	~~8304~~	9-1913	S	Wal.	2-3½"	2-#E	ET6D	Yes	8½"CC	Flex.	Pneu.	S.B.	Yes
~~8301~~	—	~~S~~	—	—	—	—	—	—	—	—	—	—	~~8305~~	—	~~S~~	—	—	—	—	—	—	—	—	—	—
~~8302~~	—	~~S~~	—	—	—	—	—	—	—	—	—	—	~~8306~~	—	~~S~~	—	—	—	—	—	—	—	—	—	—
4603	9-1913	S	Wal.	2-3½"	2-#E	ET6D	Yes	8½"CC	Flex.	Pneu	S.B.	Yes	4607	"	S	"	"	"	"	"	"	"	"	"	"

Old No's 8300-8307

54084-54091

M.C.R.R.

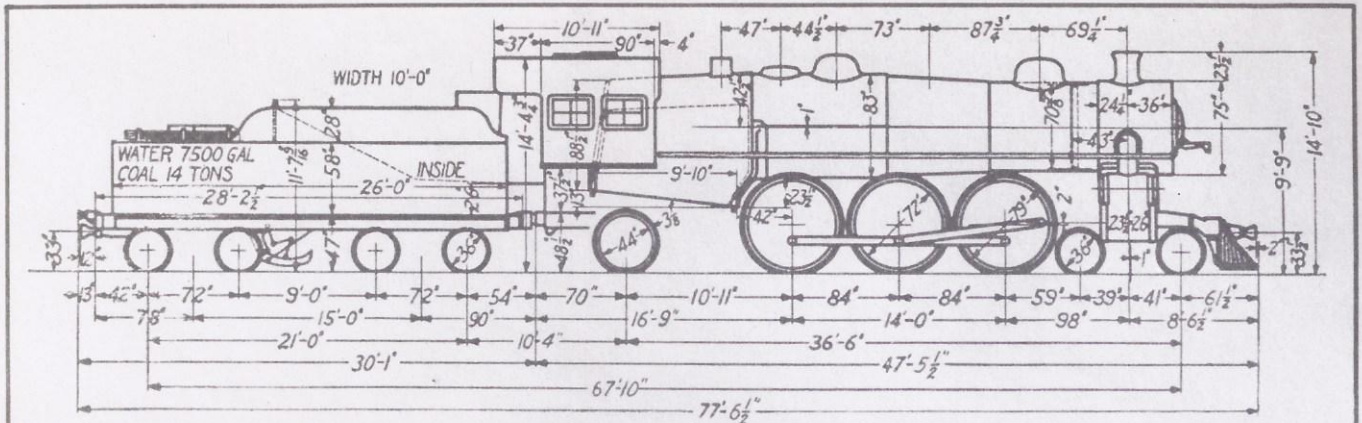

Built by the *American Locomotive Co.* *Schenectady* Works.	Kind of main valve *14in. Piston*	Weight on front truck working order *50000 lbs.*
Builder's order No. *S-1133*	Firebox length, inside *108⅛ in.*	Weight on drivers working order *172500 lbs.*
	Firebox width, inside *75¼ in.*	Weight on rear truck working order *50000 lbs.*
Number of Locomotives 5	Grate area *56.5 sq.ft.*	Total weight of engine working order *272500 lbs.*
	Tubes, number large *32-5⅜ in.*	Weight of tender, loaded *161200 lbs.*
	Tubes, number small *229-2 in.*	Weight of tender, empty *70700 lbs.*
	Tubes, length over sheets *21ft.6in.*	Steam pressure *200 lbs.*
	Heating surface tubes *3527.8 sq.ft.*	Max. tractive force *30900 lbs.*
Note *These engines are equipped with a radial buffer between engine and tender.*	Heating surface firebox and arch tubes *229.2 sq.ft.*	
Rating *30.9 %*	Total heating surface *3757. sq.ft.*	
	Heating surface superheater *810. sq.ft.*	

CLASS K-3H

ENGINE NUMBER	DATE BUILT	SUPERHEAT.	VALVE GEAR	SAFETY VALVES	INJECTORS	ENGINEERS BRAKE VALVE EQUIPMENT	STEAM HEAT AIR SIGNAL	AIR PUMP	STAYBOLTS	FIREDOORS	TENDER TRUCKS	WATER SCOOP	ENGINE NUMBER	DATE BUILT	SUPERHEAT.	VALVE GEAR	SAFETY VALVES	INJECTORS	ENGINEERS BRAKE VALVE EQUIPMENT	STEAM HEAT AIR SIGNAL	AIR PUMP	STAYBOLTS	FIREDOORS	TENDER TRUCKS	WATER SCOOP
#4608	2-1916	S	Wal.	2-3½"	2-#11	ET6D	Yes	8½"cc	Flex.	Pneu.	S.B.	Yes	4642	2-1916	S	Wal.	2-3½"	2-#11	ET6D	Yes	8½"cc	Flex.	Pneu.	S.B.	Yes
#4609	"	S	"	"	"	"	"	"	"	"	"	"	4643	"	S	"	"	"	"	"	"	"	"	"	"
4640	"	S	"	"	"	"	"	"	"	"	"	"	4644	"	S	"	"	"	"	"	"	"	"	"	"
4641	"	S	"	"	"	"	"	"	"	"	"	"													

Old Nos	New Nos	
8400 to 8404	4640 to 4644	55615 to 55619
8308 to [redacted]	4608 to [redacted]	55620 to 55621

Originally 8310 was in this class but retired before July 1, 1936 # 56522

CLASS K-3H

M. C. R. R.

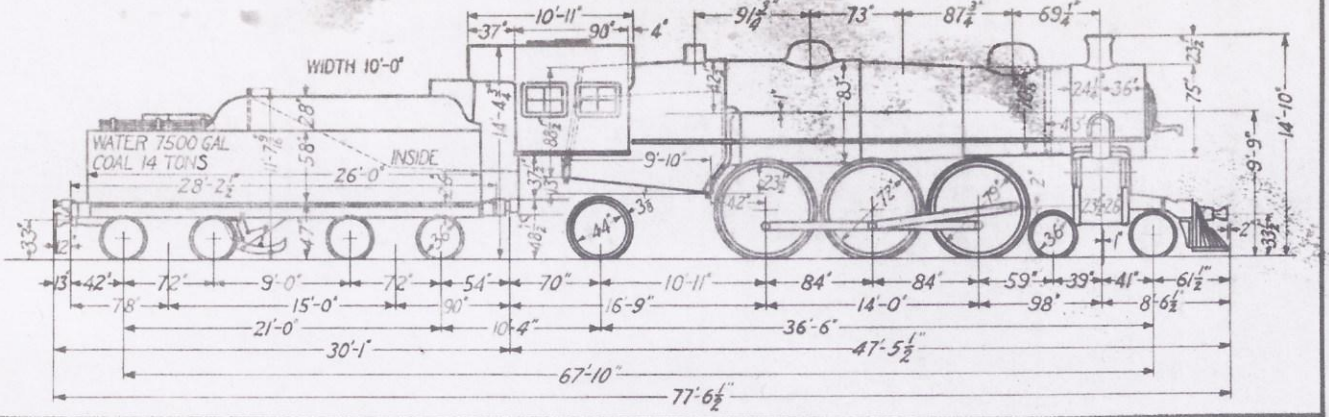

Built by the American Locomotive Co. Schenectady Works.	Kind of main valve 14 in. Piston	Weight on front truck working order 49000 lbs.
Builder's order No. S-1202	Firebox length, inside 108⅛ in.	Weight on drivers working order 178000 lbs.
	Firebox width, inside 75½ in.	Weight on rear truck working order 49000 lbs.
Number of Locomotives ~~5~~ 4	Grate area 56.5 sq. ft.	Total weight of engine working order 276000 lbs.
Note These engines are equipped with a radial buffer between engine and tender.	Tubes, number large 32-5⅜ in.	Weight of tender, loaded 162800 lbs.
Rating 30.9%	Tubes, number small 229-2 in.	Weight of tender, empty 73700 lbs.
	Tubes, length over sheets 21 ft. 6 in.	Steam pressure 200 lbs.
	Heating surface tubes 3527.8 sq. ft.	Max. tractive force 30900 lbs.
	Heating surface firebox and arch tubes 229.2 sq. ft.	
	Total heating surface 3757. sq. ft.	
	Heating surface superheater 810. sq. ft.	

CLASS K-3:

ENGINE NUMBER	DATE BUILT	SUPERHEAT.	VALVE GEAR	SAFETY VALVES	INJECTORS	ENGINEERS BRAKE VALVE EQUIPMENT	STEAM HEAT AIR SIGNAL	AIR PUMP	STAYBOLTS	FIREDOORS	TENDER TRUCKS	WATER SCOOP	ENGINE NUMBER	DATE BUILT	SUPERHEAT	VALVE GEAR	SAFETY VALVES	INJECTORS	ENGINEERS BRAKE VALVE EQUIPMENT	STEAM HEAT AIR SIGNAL	AIR PUMP	STAYBOLTS	FIREDOORS	TENDER TRUCKS	WATER SCOOP
~~8310~~	~~3-1917~~	~~S~~	~~Wal.~~	~~2-3½"~~	~~2-#11~~	~~ET6D~~	~~Yes~~	~~8½"cc~~	~~Flex.~~	~~Pneu~~	~~S.B.~~	~~Yes~~													
4611	3-1917	S	Wal.	2-3½" Nl-A	2-#11	ET6D	Yes	8½"cc	Flex.	Pneu	S.B.	Yes													
4612	"	S	"	"	"	"	"	"	"	"	"	"													
4613	"	S	"	"	"	"	"	"	"	"	"	"													
4614	"	S	"	"	"	"	"	"	"	"	"	"													

Old No's 8310-8314

56761-56765

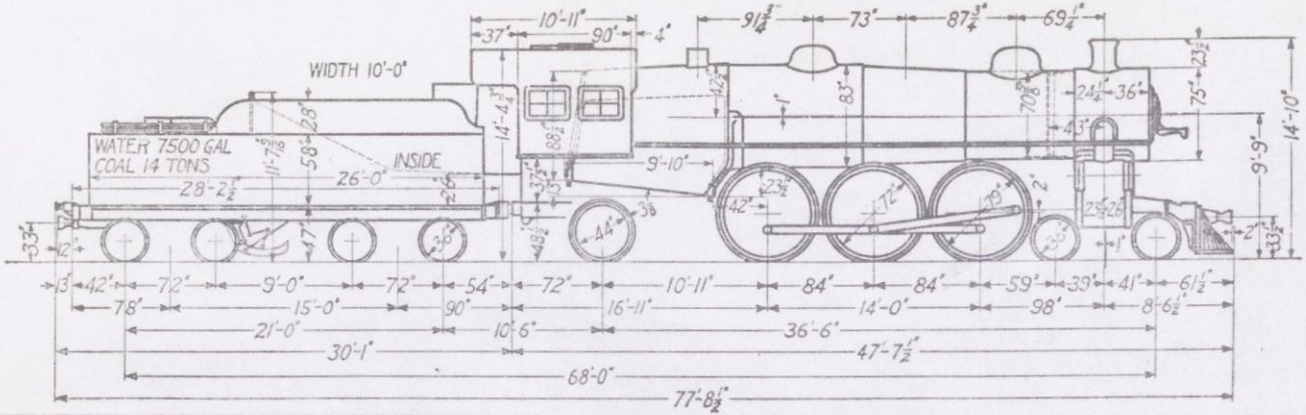

Built by the American Locomotive Co. Brooks Works.	Kind of main valve 14 in. Piston	Weight on front truck working order 49000 lbs.
Builder's order No. B-1463	Firebox length, inside 108⅛ in.	Weight on drivers working order 180500 lbs.
	Firebox width, inside 75¼ in.	Weight on rear truck working order 49500 lbs.
	Grate area 56.5 sq. ft.	Total weight of engine working order 279000 lbs.
Number of Locomotives 10	Tubes, number large 32-5⅜ in.	Weight of tender, loaded 166500 lbs.
	Tubes, number small 229-2 in.	Weight of tender, empty 76500 lbs.
	Tubes, length over sheets 21 ft. 6 in.	Steam pressure 200 lbs.
	Heating surface tubes 3531. sq. ft.	Max. tractive force 30900 lbs.
Note These engines are equipped with a radial buffer between engine and tender.	Heating surface firebox and arch tubes 229. sq. ft.	
Rating 30.9 %	Total heating surface 3760. sq. ft.	
	Heating surface superheater 834. sq. ft.	

CLASS K-3M

ENGINE NUMBER	DATE BUILT	SUPERHEAT.	VALVE GEAR	SAFETY VALVES	INJECTORS	ENGINEERS BRAKE VALVE EQUIPMENT	STEAM HEAT AIR SIGNAL	AIR PUMP	STAYBOLTS	FIREDOORS	TENDER TRUCKS	WATER SCOOP	ENGINE NUMBER	DATE BUILT	SUPERHEAT.	VALVE GEAR	SAFETY VALVES	INJECTORS	ENGINEERS BRAKE VALVE EQUIPMENT	STEAM HEAT AIR SIGNAL	AIR PUMP	STAYBOLTS	FIREDOORS	TENDER TRUCKS	WATER SCOOP
4615	3-1918	S	Wal.	2-3½"	2"11	ET6D	Yes	8½"cc	Flex.	Pneu	S.B.	Yes	4620	3-1918	S	Wal.	2-3½"	2-"11	ET6D	Yes	8½"cc	Flex.	Pneu	S.B.	Yes
4616	"	S	"	"	"	"	"	"	"	"	"	"	4621	"	S	"	"	"	"	"	"	"	"	"	"
4617	"	S	"	"	"	"	"	"	"	"	"	"	4622	"	S	"	"	"	"	"	"	"	"	"	"
4618	"	S	"	"	"	"	"	"	"	"	"	"	4623	"	S	"	"	"	"	"	"	"	"	"	"
4619	"	S	"	"	"	"	"	"	"	"	"	"	4624	"	S	"	"	"	"	"	"	"	"	"	"

Old No's 8315-8324 Bldr's No. 58133-58142

The following data refers to engine 4622 only which is equipped with a ~~Type "C" superheater and the~~ F.R.S.Co., locomotive booster:-

~~Tubes, number large ..... 150-2¼ in.~~
~~Tubes, number small ..... 89-2 in.~~
~~Heating surface tubes ..... 3589 sq.ft.~~
~~Heating surface firebox and arch tubes ..... 209 sq.ft.~~
~~Total heating surface ..... 3818 sq.ft.~~
~~Heating surface, superheater ..... 1090 sq.ft.~~
~~Diameter of cylinders ..... 26½ in.~~
~~Rating ..... 86.6%~~
~~Factor of adhesion ..... 5.37~~

Weight on front truck, working order ..... 42000 lbs.
Weight on drivers, working order ..... 190500 lbs.
Weight on rear truck, working order ..... 52500 lbs.
Total weight of engine, working order ..... 285000 lbs.
~~Maximum tractive force ..... 33580 lbs.~~

Engine designed for 18°–30′ curve.

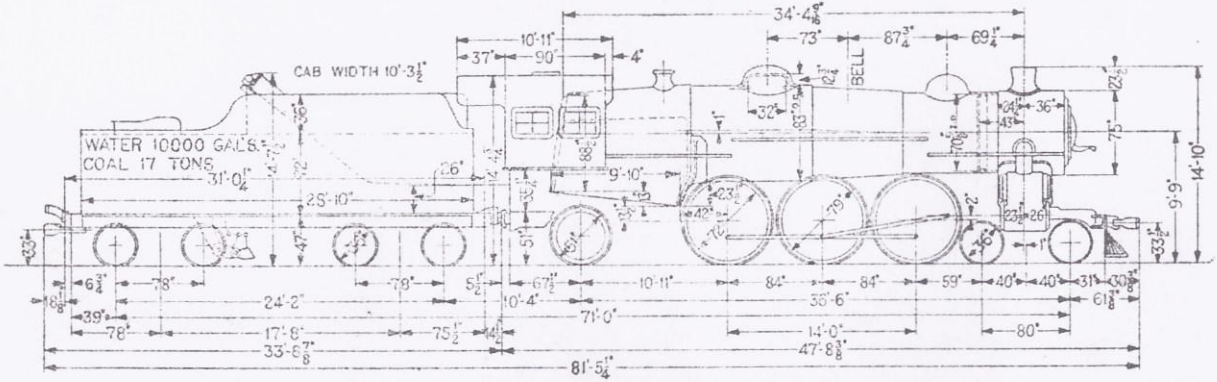

Class	Order No.	Built By	Engine Nos.	No. of Locos.
K-3p	S-1333	A.L. Co.	3297 to 3316	20
	S-1336		3317 to 3322	6

Rating, Engine, 30.8%
Rating, Engine and Booster, 40.6%

Kind of main valve	14 in. piston
Firebox, length inside	108⅛ in.
Firebox, width inside	75¼ in.
Grate area	56.5 sq. ft.
Tubes, number large	32 5½ in.
Tubes, number small	175 2¼ in.
Tubes, length over sheets	21 ft. 6 in.
Heating surface tubes	3193 sq. ft.
Heating surface firebox and arch tubes	231 sq. ft.
Total heating surface	3424 sq. ft.
Heating surface, superheater	832 sq. ft.
Weight on front Truck, working order	40000 lbs.
Weight on Drivers, working order	194500 lbs.
Weight on rear Truck, working order	53500 lbs.
Total weight of Engine, working order	288000 lbs.
Weight of Tender, loaded	207000 lbs.
Weight of Tender, empty	89700 lbs.
Steam Pressure	200 lbs.
Max. Tractive Force, Engine	30900 lbs.
Tractive Force, Booster	9710 lbs.
Combined Tractive Force, Engine and Booster	40610 lbs.

ENGINE NUMBER	DATE BUILT	SUPERHEATER	VALVE GEAR	ENGINEERS BRAKE VALVE	BOOSTER	STEAM HEAT AIR SIGNAL	AIR PUMP	TENDER CAPACITY Gals. Water	TENDER CAPACITY Tons Coal	WATER SCOOP	ENGINE NUMBER	DATE BUILT	SUPERHEATER	VALVE GEAR	ENGINEERS BRAKE VALVE	BOOSTER	STEAM HEAT AIR SIGNAL	AIR PUMP	TENDER CAPACITY Gals. Water	TENDER CAPACITY Tons Coal	WATER SCOOP
3297	11–1920	S	Walsch.	H-6	Yes	Yes	W.8½"C.C.	10000	17	Yes	3310	12–1920	S	Walsch.	H-6	Yes	Yes	W.8½"C.C.	10000	17	Yes
3298	"	S	"	"	"	"	"	"	"	"	[illegible]	4701	S	"	"	"	"	"	"	"	"
3299	"	S	"	"	"	"	"	"	"	"	3312	"	S	"	"	"	"	"	"	"	"
4700 [illegible]	"	S	"	"	"	"	"	"	"	"	3313	"	S	"	"	"	"	"	"	"	"
3301	"	S	"	"	"	"	"	"	"	"	3314	"	S	"	"	"	"	"	"	"	"
3302	"	S	"	"	"	"	"	"	"	"	3315	"	S	"	"	"	"	"	"	"	"
3303	"	S	"	"	"	"	"	"	"	"	3316	"	S	"	"	"	"	"	"	"	"
3304	"	S	"	"	"	"	"	"	"	"	3317	"	S	"	"	"	"	"	"	"	"
3305	12–1920	S	"	"	"	"	"	"	"	"	3318	"	S	"	"	"	"	"	"	"	"
3306	"	S	"	"	"	"	"	"	"	"	3319	"	S	"	"	"	"	"	"	"	"
4707 [illegible]*	"	S	"	"	"	"	"	"	"	"	3320	"	S	"	"	"	"	"	"	"	"
3308	"	S	"	"	"	"	"	"	"	"	3321*	"	S	"	"	"	"	"	"	"	"
3309	"	S	"	"	"	"	"	"	"	"	3322	"	S	"	"	"	"	"	"	"	"

* Equipped with exhaust steam injector.

4700-4707-4711 assigned to MCRR

3307 ONLY M.C. LOCO

M.C.R.R.

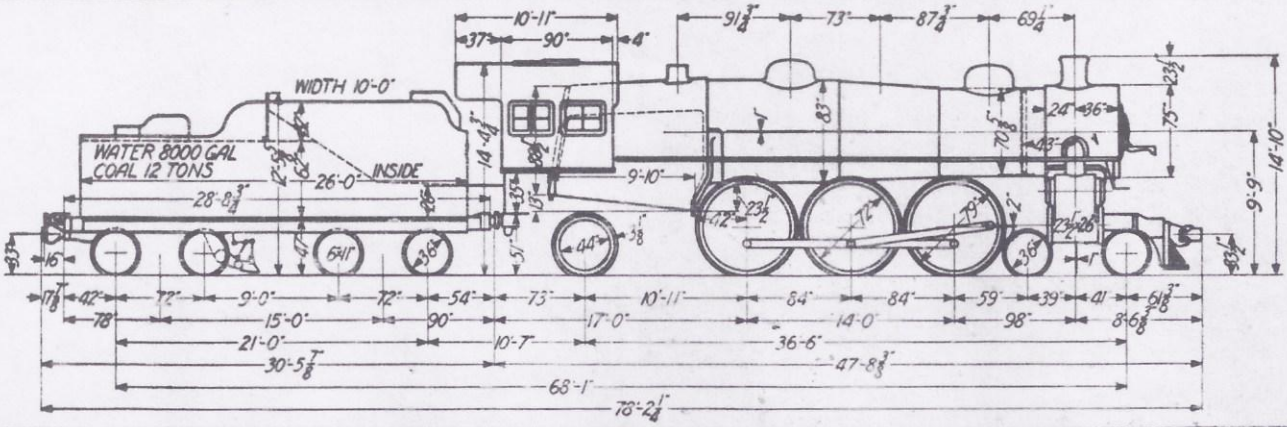

Built by the American Locomotive Co. Schenectady Works.		Kind of main valve	14 in. Piston	Weight on front truck working order	40000 lbs.
Builder's order No. S-1334		Firebox length, inside	108 1/8 in.	Weight on drivers working order	194500 lbs.
All locos. are equipped with F.R.S.Co. adj. wedges, radial buffer & C.S.Co. "Delta" trailing truck.		Firebox width, inside	75 1/4 in.	Weight on rear truck working order	53500 lbs.
Number of Locomotives	10	Grate area	56.5 sq.ft.	Total weight of engine working order	288000 lbs.
All locos. are equipped with Precision Type "D" reverse gear and loco. booster		Tubes, number large	32-5 1/2 in.	Weight of tender, loaded	168000 lbs.
		Tubes, number small	175-2 1/4 in.	Weight of tender, empty	76400 lbs.
Engines designed for 18° 30' curve		Tubes, length over sheets	21 ft. 6 in.	Steam pressure	200 lbs.
Rating 30.9% - With booster 40.8%		Heating surface tubes	3193 sq.ft.	Max. tractive force	30900 lbs.
Factor of adhesion	6.29	Heating surface firebox and arch tubes	231 sq.ft.		
		Total heating surface	3424 sq.ft.		
		Heating surface superheater	823 sq.ft.		

CLASS K-3p

ENGINE NUMBER	DATE BUILT	SUPERHEAT.	VALVE GEAR	SAFETY VALVES	INJECTORS	ENGINEERS BRAKE VALVE EQUIPMENT	STEAM HEAT AIR SIGNAL	AIR PUMP	STAYBOLTS	FIREDOORS	TENDER TRUCKS	WATER SCOOP	ENGINE NUMBER	DATE BUILT	SUPERHEAT.	VALVE GEAR	SAFETY VALVES	INJECTORS	ENGINEERS BRAKE VALVE EQUIPMENT	STEAM HEAT AIR SIGNAL	AIR PUMP	STAYBOLTS	FIREDOORS	TENDER TRUCKS	WATER SCOOP
4625	12-1920	S	Wal.	2-3½"	2-#11	ET6D	Yes	8½"cc	Flex.	Pneu	SB	Yes		12-1920	S	Wal.	2-3½"	2-#11	ET6D	Yes	8½"cc	Flex.	Pneu.	SB	Yes
4626	"	S	"	"	"	"	"	"	"	"	"	"		"	S	"	"	"	"	"	"	"	"	"	"
4627	"	S	"	"	"	"	"	"	"	"	"	"		"	S	"	"	"	"	"	"	"	"	"	"
4628	"	S	"	"	"	"	"	"	"	"	"	"		"	S	"	"	"	"	"	"	"	"	"	"
4629	"	S	"	"	"	"	"	"	"	"	"	"		"	S	"	"	"	"	"	"	"	"	"	"
4630	"	S	"	"	"	"	"	"	"	"	"	"													
4631	"	S	"	"	"	"	"	"	"	"	"	"													
4632	"	S	"	"	"	"	"	"	"	"	"	"													
4633	"	S	"	"	"	"	"	"	"	"	"	"													
4634	"	S	"	"	"	"	"	"	"	"	"	"													

Old Nos 8325 - 8334

C. C. C. & St. L.

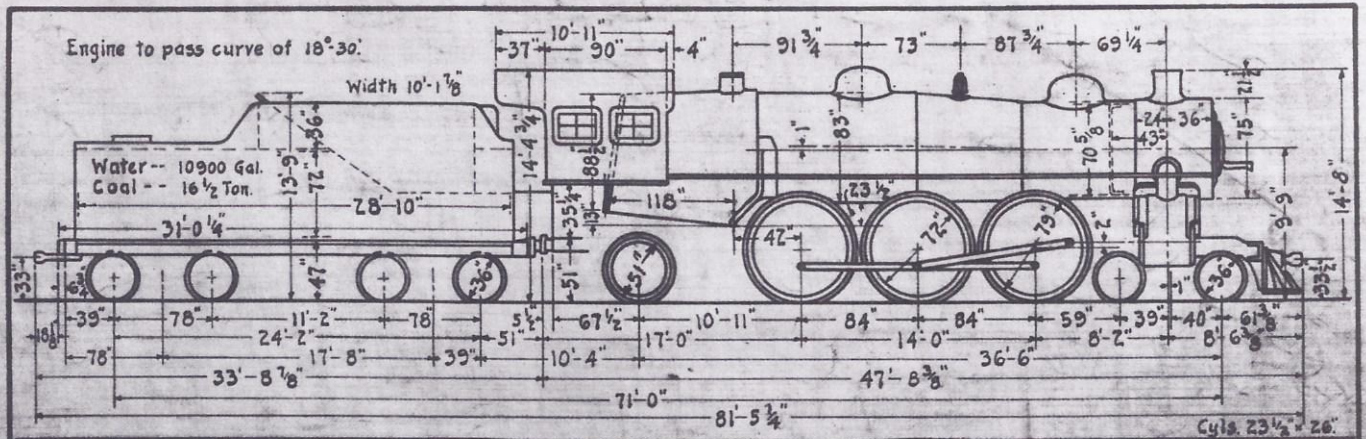

Built by the American Locomotive Co. Schenectady Works.	Kind of main valve ... 14 in. piston	Weight on front truck working order } * 42800 lbs. / 45700 lbs.
Builder's order No. S-1335	Firebox length, inside ... 108 1/8 in.	Weight on drivers working order } * 193800 lbs. / 186600 lbs.
	Firebox width, inside ... 75 1/4 in.	Weight on rear truck working order } * 52500 lbs. / 48400 lbs.
	Grate area ... 56.5 sq. ft.	
Number of Locomotives ... 1	Tubes, number large ... 32-5 1/2 in.	Total weight of engine working order } * 289100 lbs. / 280200 lbs.
M.C.R.R.	Tubes, number small ... 175-2 1/4 in.	
	Tubes, length over sheets ... 21 ft.-6 in.	Weight of tender, loaded ... 203800 lbs.
Note * Refers to engines with Booster.	Heating surface tubes ... 3193 sq. ft.	Weight of tender, empty ... 86500 lbs.
ORIGINAL H-10A TANK	Heating surface firebox and arch tubes ... 231 sq. ft.	Steam pressure ... 200 lbs.
RATING 30.2% *40.6%	Total heating surface ... 3424 sq. ft.	Max. tractive force ... * 40600 / 30300 lbs.
	Heating surface superheater ... 832 sq. ft.	

Class K-3-P

ENGINE NUMBER	DATE BUILT	SUPERHEATER	VALVE GEAR	SAFETY VALVES	INJECTORS	ENGRS. BRAKE VALVE EQUIP.	STEAM HEAT AIR SIGNAL	AIR PUMP	STAYBOLTS	TENDER TRUCKS	BOOSTER	STOKER	REVERSE GEAR	ENGINE NUMBER	DATE BUILT	SUPERHEATER	VALVE GEAR	SAFETY VALVES	INJECTORS	ENGRS. BRAKE VALVE EQUIP.	STEAM HEAT AIR SIGNAL	AIR PUMP	STAYBOLTS	TENDER TRUCKS	BOOSTER	STOKER	REVERSE GEAR
6475	1920	S	W	2-3½	S-11	6ET	YES	2-11	FLEX	COM.	NO	NO	PREC	6480	1920	S	W	2-3½	S-11	6ET	YES	2-11	FLEX	COM.	NO	NO.	T.D.C.
6476	"	"	"	"	"	"	"	"	"	"	"	"	"	6481	"	"	"	"	"	"	"	"	"	"	C-1	"	"
6477	"	"	"	"	"	"	"	"	"	"	"	"	"	6482	"	"	"	"	"	"	"	"	"	"	"	"	"
6478	"	"	"	"	"	"	"	"	"	"	"	"	"	6483	"	"	"	"	"	"	"	"	"	"	"	"	"
6479	"	"	"	"	"	"	"	"	"	"	"	"	"	6484	"	"	"	"	"	"	"	"	"	"	"	"	"

TENDERS EQUIPPED WITH COAL PUSHERS

6480 ASSIGNED TO M.C.R.R.
4881 " " " "

Engine designed for 18°–30′ curve.

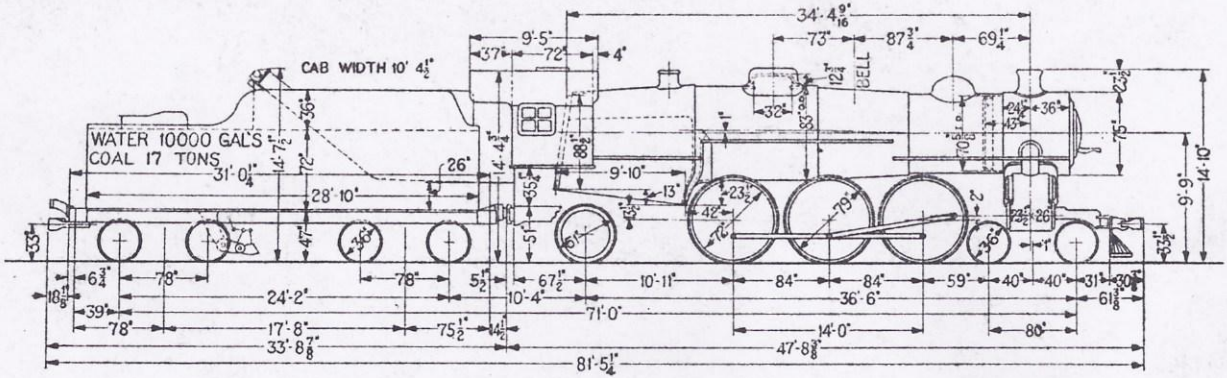

Built by the American Locomotive Co., Brooks Works

Builder's Order No. B-1589

Number of Locomotives ~~4~~ 5

Rating, Engine 30.9%

Rating, Engine and Booster, 40.6%

Kind of main valve	14 in. piston
Firebox, length inside	108⅛ in.
Firebox, width inside	75¼ in.
Grate area	56.5 sq. ft.
Tubes, number large	32 5½ in.
Tubes, number small	175 2¼ in.
Tubes, length over sheets	21 ft. 6 in.
Heating surface tubes	3193 sq. ft.
Heating surface firebox and arch tubes	231 sq. ft.
Total heating surface	3424 sq. ft.
Heating surface, superheater	832 sq. ft.
Weight on front Truck, working order	44000 lbs.

Weight on Drivers, working order	194500 lbs.
Weight on rear Truck, working order	57000 lbs.
Total weight of Engine, working order	295500 lbs.
Weight of Tender, loaded	207000 lbs.
Weight of Tender, empty	89700 lbs.
Steam Pressure	200 lbs.
Max. Tractive Force, Engine	30900 lbs.
Tractive Force Booster	9710 lbs.
Combined Tractive Force, Engine and Booster	40610 lbs.

ENGINE NUMBER	DATE BUILT	SUPERHEATER	VALVE GEAR	ENGINEERS BRAKE VALVE	BOOSTER	STEAM HEAT AIR SIGNAL	AIR PUMP	TENDER CAPACITY Gals. Water	TENDER CAPACITY Tons Coal	WATER SCOOP	ENGINE NUMBER	DATE BUILT	SUPERHEATER	VALVE GEAR	ENGINEERS BRAKE VALVE	BOOSTER	STEAM HEAT AIR SIGNAL	AIR PUMP	TENDER CAPACITY Gals. Water	TENDER CAPACITY Tons Coal	WATER SCOOP
4668 3267	4-1923	S	Walsch.	H-6	Yes	Yes	W.8½"C.C.	10000	17	Yes	3282	3-1923	S	Walsch.	H-6	Yes	Yes	W.8½"C.C.	10000	17	Yes
[illegible]	3-1923	S	"	"	"	"	"	"	"	"	3283	"	S	"	"	"	"	"	"	"	"
3269	"	S	"	"	"	"	"	"	"	"	3284	"	S	"	"	"	"	"	"	"	"
3270	"	S	"	"	"	"	"	"	"	"	3285	"	S	"	"	"	"	"	"	"	"
3271	"	S	"	"	"	"	"	"	"	"	3286	"	S	"	"	"	"	"	"	"	"
3272	"	S	"	"	"	"	"	"	"	"	3287	4-1923	S	"	"	"	"	"	"	"	"
3273	"	S	"	"	"	"	"	"	"	"	3288	"	S	"	"	"	"	"	"	"	"
3274	"	S	"	"	"	"	"	"	"	"	3289	"	S	"	"	"	"	"	"	"	"
3275	"	S	"	"	"	"	"	"	"	"	3290	"	S	"	"	"	"	"	"	"	"
3276	"	S	"	"	"	"	"	"	"	"	3291	"	S	"	"	"	"	"	"	"	"
[illegible] 4677	"	S	"	"	"	"	"	"	"	"	[illegible] 4692	"	S	"	"	"	"	"	"	"	"
[illegible] 4678	"	S	"	"	"	"	"	"	"	"	3293	"	S	"	"	"	"	"	"	"	"
3279	2-1923	S	"	"	"	"	"	"	"	"	3294	"	S	"	"	"	"	"	"	"	"
3280	3-1923	S	"	"	"	"	"	"	"	"	3295	"	S	"	"	"	"	"	"	"	"
[illegible] 4681		S	"	"	"	"	"	"	"	"	3296	"	S	"	"	"	"	"	"	"	"

~~3281~~ ~~3277~~ ~~3278~~ 4668 4677 4678 4681 4692 } MC

~~3286~~ ~~3292~~ } ONLY M.C. LOCOS

M.C.R.R.

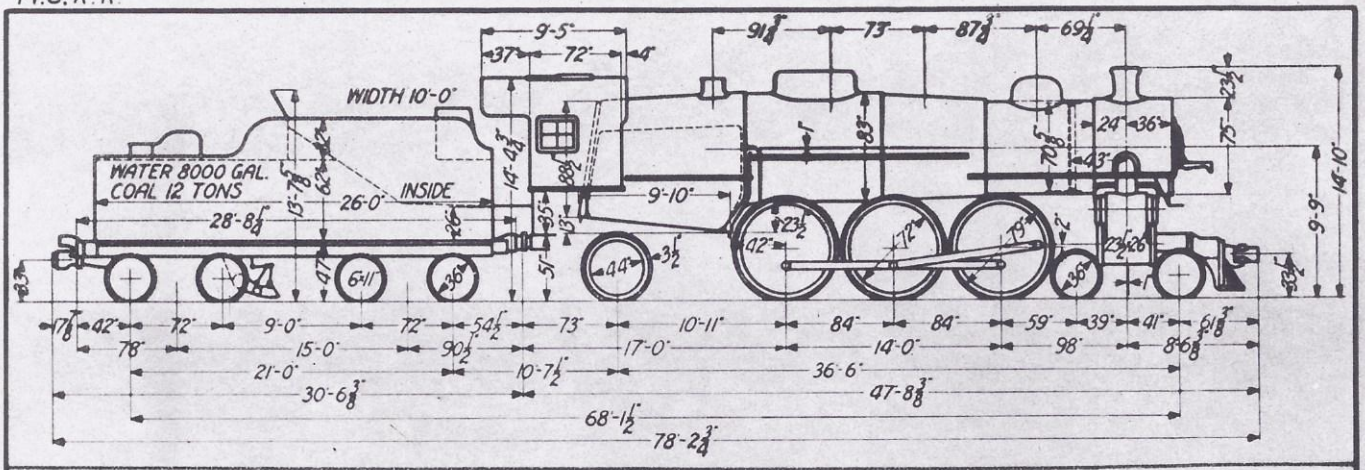

Built by the American Locomotive Co. Brooks **Works.**	**Kind of main valve**	14 in. Piston.	**Weight on front truck working order**	44000 lbs.
Builder's order No. B-1589	**Firebox length, inside**	108⅛ in.	**Weight on drivers working order**	194500 lbs.
Locos. 8338 & 8339 are equipped with Trans. Device Corp. Automatic Control	**Firebox width, inside**	75¼ in.	**Weight on rear truck working order**	57000 lbs.
Number of Locomotives 5	**Grate area**	56.5 sq. ft.	**Total weight of engine working order**	295500 lbs.
Locos. 8335, 8336 & 8337 are equipped with F.R.S. Co. "Precision" reverse gear.	**Tubes, number large**	32-5½ in.	**Weight of tender, loaded**	168700 lbs.
Note All locos. are equipped with F.R.S. Co. Loco. Booster, Radial Buffer & Adjustable Wedges.	**Tubes, number small**	175-2¼ in.	**Weight of tender, empty**	79000 lbs.
Rating 30.9%	**Tubes, length over sheets**	21 ft. 6 in.	**Steam pressure**	200 lbs.
Factor of adhesion 6.29	**Heating surface tubes**	3193 sq. ft.	**Max. tractive force**	30900 lbs.
	Heating surface firebox and arch tubes	231 sq. ft.		
	Total heating surface	3424 sq. ft.		
	Heating surface superheater	838 sq. ft.		

CLASS K-3a

ENGINE NUMBER	DATE BUILT	SUPERHEAT.	VALVE GEAR	SAFETY VALVES	INJECTORS	ENGINEERS BRAKE VALVE EQUIPMENT	STEAM HEAT AIR SIGNAL	AIR PUMP	STAYBOLTS	FIREDOORS	TENDER TRUCKS	WATER SCOOP	ENGINE NUMBER	DATE BUILT	SUPERHEAT.	VALVE GEAR	SAFETY VALVES	INJECTORS	ENGINEERS BRAKE VALVE EQUIPMENT	STEAM HEAT AIR SIGNAL	AIR PUMP	STAYBOLTS	FIREDOORS	TENDER TRUCKS	WATER SCOOP
4635	4-1923	S	Wal.	2-3½"	2-#11	ET6D	Yes	8½"cc	Flex	Pneu.	SB	Yes													
4636	"	S	"	"	"	"	"	"	"	"	"	"													
4637	"	S	"	"	"	"	"	"	"	"	"	"													
4638	"	S	"	"	"	"	"	"	"	"	"	"													
4639	"	S	"	"	"	"	"	"	"	"	"	"													

Old MCRR No's 8335-8339

C. C. C. & St. L.

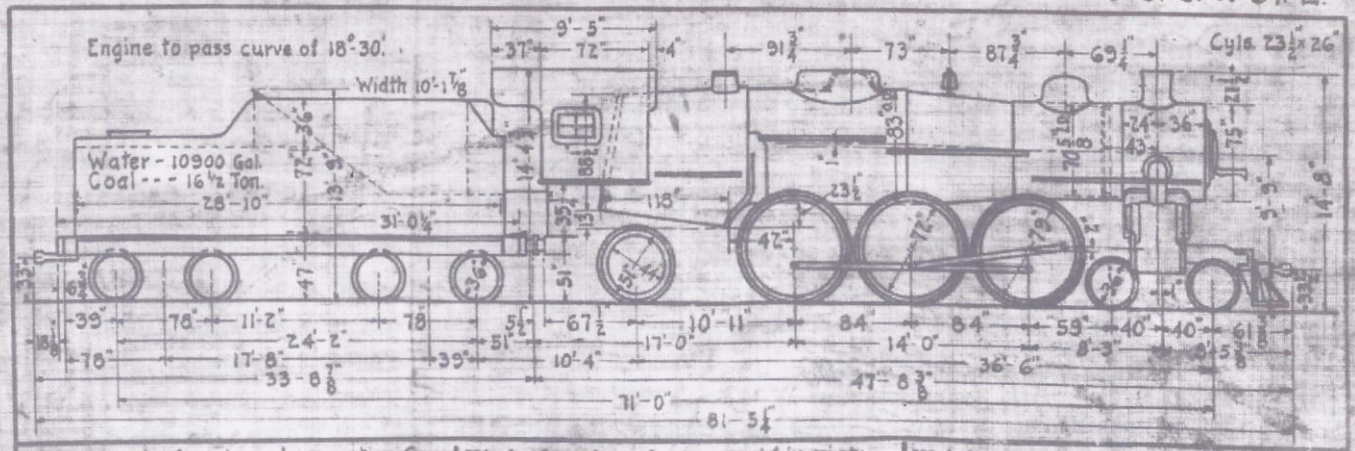

Built by the American Locomotive Co. Dunkirk Works.	Kind of main valve 14 in. piston	Weight on front truck working order 44000 lbs.
Builder's order No. B-1589	Firebox length, inside 108⅛ in.	Weight on drivers working order 194500 lbs.
	Firebox width, inside 75¼ in.	Weight on rear truck working order 57000 lbs.
Number of Locomotives - 15	Grate area 56.5 sq. ft.	Total weight of engine working order 295500 lbs.
	Tubes, number large 32-5½ in.	Weight of tender, loaded 707000 lbs.
Note * Includes Booster	Tubes, number small 175-2¼ in.	Weight of tender, empty 86800 lbs.
Original H-10-a Tank built 1922 & 1923	Tubes, length over sheets 21 ft. 6 in.	Steam pressure 200 lbs.
Rating 30.9% and *40.6%	Heating surface tubes 3193 sq. ft.	Max. tractive force * 40600 lbs.
	Heating surface firebox and arch tubes 231 sq. ft.	30900 lbs.
	Total heating surface 3424 sq. ft.	
	Heating surface superheater 832 sq. ft.	

Class K-3-a

C.C.C. & ST.L

ENGINE NUMBER	DATE BUILT	SUPERHEATER	VALVE GEAR	SAFETY VALVES	INJECTORS	ENGRS. BRAKE VALVE EQUIP.	STEAM HEAT AIR SIGNAL	AIR PUMP	STAYBOLTS	TENDER TRUCKS	BOOSTER	STOKER	REVERSE GEAR	ENGINE NUMBER	DATE BUILT	SUPERHEATER	VALVE GEAR	SAFETY VALVES	INJECTORS	ENGRS. BRAKE VALVE EQUIP.	STEAM HEAT AIR SIGNAL	AIR PUMP	STAYBOLTS	TENDER TRUCKS	BOOSTER	STOKER	REVERSE GEAR
6485	1923	S	W	2-3½	2-"11	6ET	YES	2-"11	FLEX	COM	C-1	NO	PREC.	6493+	1923	S	W	2-3½	2-"11	6ET	YES	2-11"	FLEX	COM	C-1	NO	PREC.
6486+	"	"	"	"	"	"	"	"	"	"	"	"	"	6494+	"	"	"	"	"	"	"	"	"	"	"	"	"
6487+	"	"	"	"	"	"	"	"	"	"	"	"	"	6495+	"	"	"	"	"	"	"	"	"	"	"	"	T.D.C.
6488+	"	"	"	"	"	"	"	"	"	"	"	"	"	6496+	"	"	"	"	"	"	"	"	"	"	"	"	"
6489+	"	"	"	"	"	"	"	"	"	"	"	"	"	6497+	"	"	"	"	"	"	"	"	"	"	"	"	"
6490	"	"	"	"	"	"	"	"	"	"	"	"	"	6498+	"	"	"	"	"	"	"	"	"	"	"	"	"
6491+	"	"	"	"	"	"	"	"	"	"	"	"	"	6499+	"	"	"	"	"	"	"	"	"	"	"	"	"
6492+	"	"	"	"	"	"	"	"	"	"	"	"	"														

ASSIGNED TO M.C.R.R.

EACH ENGINE HAS TWO PNEUMATIC FIRE DOORS

+ INDICATES LOCO'S EQUIPPED WITH COAL PUSHERS

CLASS K-3Q

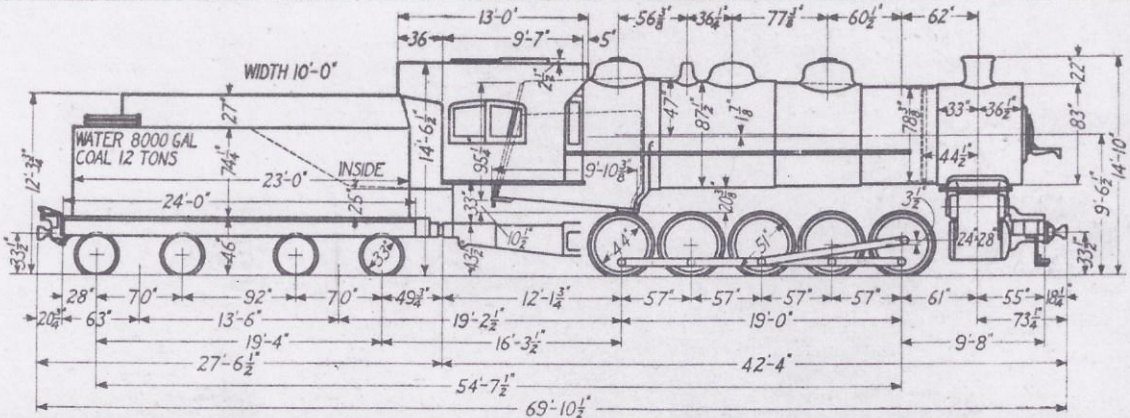

Built by the American Locomotive Co. Brooks Works.	Kind of main valve: 12 in. Piston	Weight on front truck working order: —
Builder's order No. B-1091	Firebox length, inside: 108 1/8 in.	Weight on drivers working order: 277000 lbs.
	Firebox width, inside: 73 3/4 in.	
	Grate area: 55 sq. ft.	
Number of Locomotives 1	Tubes, number large: 36-5 1/2 in.	Weight on rear truck working order: —
	Tubes, number small: 250-2 in.	
	Tubes, length over sheets: 19 ft. 0 in.	Total weight of engine working order: 277000 lbs.
Note	Heating surface tubes: 3451.3 sq. ft.	Weight of tender, loaded: 150000 lbs.
	Heating surface firebox and arch tubes: 221.8 sq. ft.	Weight of tender, empty: 59300 lbs.
Rating 56.5 %	Total heating surface: 3673.1 sq. ft.	Steam pressure: 210 lbs.
	Heating surface superheater: 806 sq. ft.	Max. tractive force: 56450 lbs.

CLASS M-1A

ENGINE NUMBER	DATE BUILT	SUPERHEAT.	VALVE GEAR	SAFETY VALVES	INJECTORS	ENGINEERS BRAKE VALVE EQUIPMENT	STEAM HEAT AIR SIGNAL	AIR PUMP	STAYBOLTS	FIREDOORS	TENDER TRUCKS	WATER SCOOP	ENGINE NUMBER	DATE BUILT	SUPERHEAT.	VALVE GEAR	SAFETY VALVES	INJECTORS	ENGINEERS BRAKE VALVE EQUIPMENT	STEAM HEAT AIR SIGNAL	AIR PUMP	STAYBOLTS	FIREDOORS	TENDER TRUCKS	WATER SCOOP
7192	2-1907	S	Wal.	2-3½"	2-#11	ET6	No	8½"cc	B.Z.	Pneu	R.B.	No													

7192 old MCRR 8992

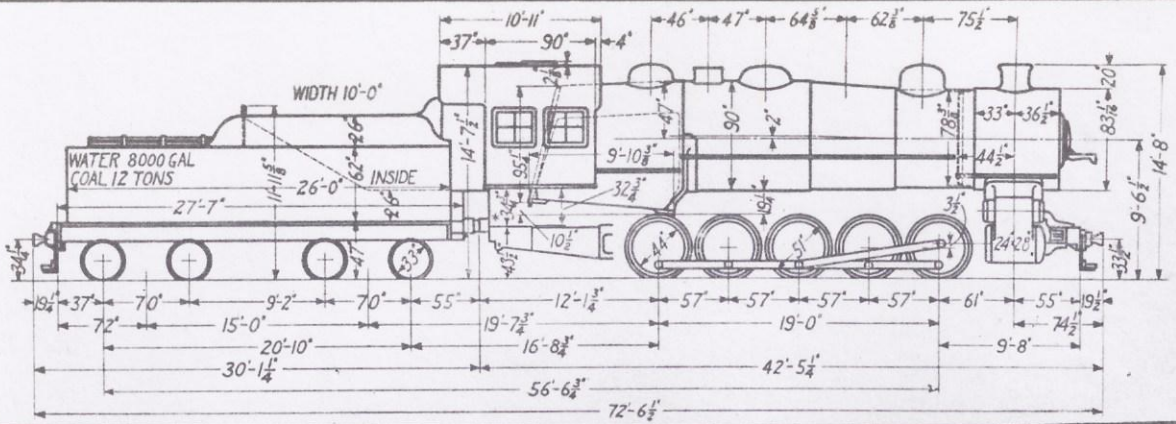

Built by the *American Locomotive Co.* *Montreal* Works.	Kind of main valve *12 in. Piston*	Weight on front truck working order ———
Builder's order No. *Q-112*	Firebox length, inside *108⅛ in.*	Weight on drivers working order *277000 lbs.*
	Firebox width, inside *73 81/64 in.*	
	Grate area *55 sq. ft.*	
	Tubes, number large *36-5½ in.*	Weight on rear truck working order ———
Number of Locomotives *1*	Tubes, number small *250-2 in.*	
	Tubes, length over sheets *19 ft. 0 in.*	Total weight of engine working order *277000 lbs.*
	Heating surface tubes *3451.3 sq. ft.*	
Note *The dimensions marked thus * on the diagram apply to this engine.*	Heating surface firebox and arch tubes *221.8 sq. ft.*	Weight of tender, loaded *150000 lbs.*
		Weight of tender, empty *59300 lbs.*
Rating *56.5%*	Total heating surface *3673.1 sq. ft.*	Steam pressure *210 lbs.*
	Heating surface superheater *806 sq. ft.*	Max. tractive force *56450 lbs.*

CLASS M-1b

ENGINE NUMBER	DATE BUILT	SUPERHEAT.	VALVE GEAR	SAFETY VALVES	INJECTORS	ENGINEERS BRAKE VALVE EQUIPMENT	STEAM HEAT AIR SIGNAL	AIR PUMP	STAYBOLTS	FIREDOORS	TENDER TRUCKS	WATER SCOOP	ENGINE NUMBER	DATE BUILT	SUPERHEAT.	VALVE GEAR	SAFETY VALVES	INJECTORS	ENGINEERS BRAKE VALVE EQUIPMENT	STEAM HEAT AIR SIGNAL	AIR PUMP	STAYBOLTS	FIREDOORS	TENDER TRUCKS	WATER SCOOP
7190	12-1909	S	Wal.	3-3"	2-#E	ET6	No	8½"cc	B.Z.	Pneu	R.B.	No													

7190 old MCRR 8990

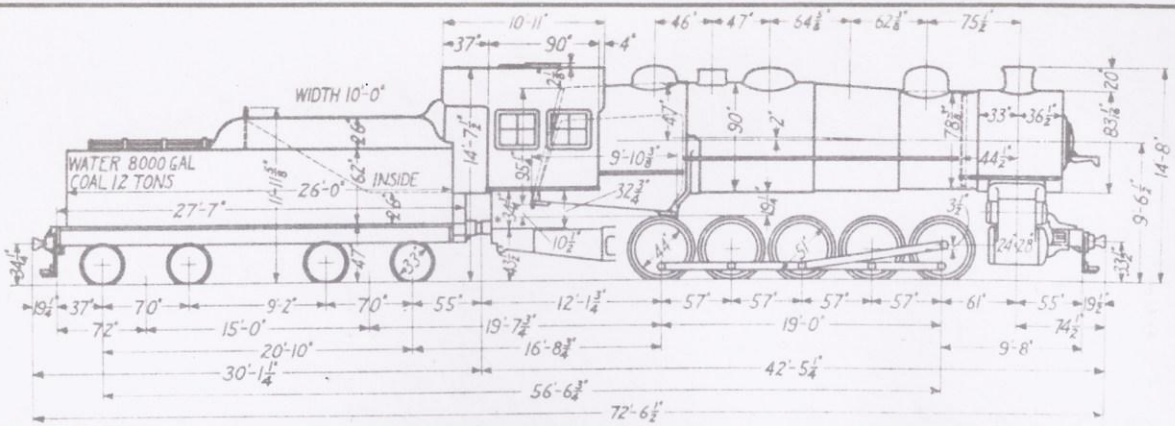

Built by the *American Locomotive Co.* *Montreal* Works.	Kind of main valve *12in. Piston.*	Weight on front truck working order ———
Builder's order No. *Q-122*	Firebox length, inside *108⅛ in.*	
	Firebox width, inside *73 1/4 in*	Weight on drivers working order *270000 lbs.*
	Grate area *55. sq.ft*	
	Tubes, number large *36-5½ in*	Weight on rear truck working order ———
Number of Locomotives *1*	Tubes, number small *250-2 in.*	
	Tubes, length over sheets *19ft. 0in.*	Total weight of engine working order *270000 lbs.*
	Heating surface tubes *3451.3 sq.ft.*	
Note *The dimensions marked thus * on the diagram do not apply to this engine.*	Heating surface firebox and arch tubes *221.8 sq.ft*	Weight of tender, loaded *150000 lbs.*
Rating *56.5 %*		Weight of tender, empty *59300 lbs.*
	Total heating surface *3673.1 sq.ft.*	Steam pressure *210 lbs.*
	Heating surface superheater *806 sq.ft.*	Max. tractive force *56450 lbs.*

CLASS M-1E

ENGINE NUMBER	DATE BUILT	SUPERHEAT.	VALVE GEAR	SAFETY VALVES	INJECTORS	ENGINEERS BRAKE VALVE EQUIPMENT	STEAM HEAT AIR SIGNAL	AIR PUMP	STAYBOLTS	FIREDOORS	TENDER TRUCKS	WATER SCOOP	ENGINE NUMBER	DATE BUILT	SUPERHEAT.	VALVE GEAR	SAFETY VALVES	INJECTORS	ENGINEERS BRAKE VALVE EQUIPMENT	STEAM HEAT AIR SIGNAL	AIR PUMP	STAYBOLTS	FIREDOORS	TENDER TRUCKS	WATER SCOOP
7191	4/1910	S	Wal.	3-3"	2-"E	ET6	No	8½ cc	B.Z.	Pneu	R.B.	No													

7191 old 8991

M. C. R. R.

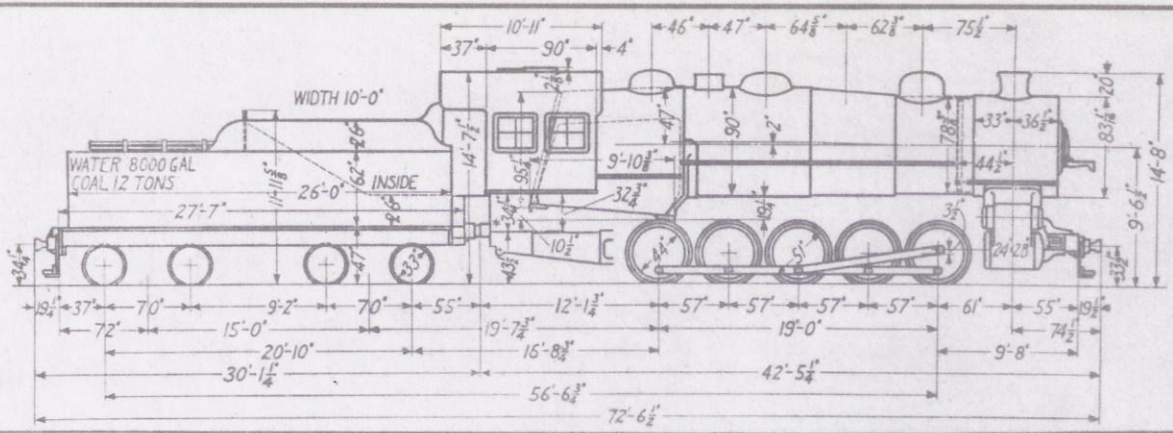

Built by the *American Locomotive Co.* *Brooks* Works.	Kind of main valve *12 in. Piston*	Weight on front truck working order —
Builder's order No. ~~B-1340~~ 1243	Firebox length, inside *108 1/8 in.*	Weight on drivers working order *269000 lbs.*
	Firebox width, inside *72 3/4 in.*	
	Grate area *55 sq. ft.*	
	Tubes, number large *36-5 5/8 in.*	Weight on rear truck working order —
Number of Locomotives *1*	Tubes, number small *250-2 in.*	
	Tubes, length over sheets *19 ft. 0 in.*	Total weight of engine working order *269000 lbs.*
	Heating surface tubes *3429.4 sq. ft.*	
Note *The dimensions marked thus * on the diagram do not apply to this engine.*	Heating surface firebox and arch tubes *221.8 sq. ft.*	Weight of tender, loaded *152000 lbs.*
Rating *56.5%*	Total heating surface *3651.2 sq. ft.*	Weight of tender, empty *61000 lbs.*
	Heating surface superheater *80.6 sq. ft.*	Steam pressure *210 lbs.*
		Max. tractive force *56450 lbs.*

CLASS M-1F

ENGINE NUMBER	DATE BUILT	SUPERHEAT.	VALVE GEAR	SAFETY VALVES	INJECTORS	ENGINEERS BRAKE VALVE EQUIPMENT	STEAM HEAT AIR SIGNAL	AIR PUMP	STAYBOLTS	FIREDOORS	TENDER TRUCKS	WATER SCOOP	ENGINE NUMBER	DATE BUILT	SUPERHEAT.	VALVE GEAR	SAFETY VALVES	INJECTORS	ENGINEERS BRAKE VALVE EQUIPMENT	STEAM HEAT AIR SIGNAL	AIR PUMP	STAYBOLTS	FIREDOORS	TENDER TRUCKS	WATER SCOOP
7198	9-1910	S	Wal.	3-3"	#E,#11	ET6	No	8½"CC	B.Z.	Pneu	R.B.	No													

7198 old No. 8998

M. C. R. R.

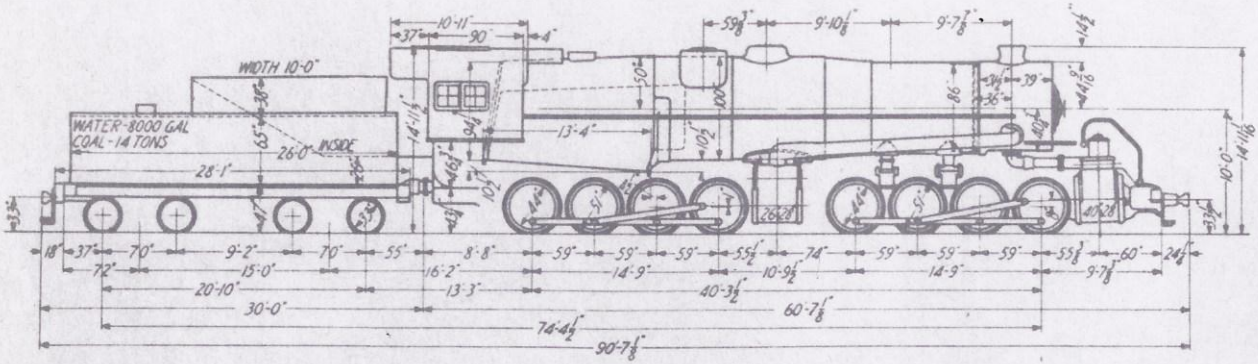

Built by the *American Locomotive Co., Brooks* Works.	Kind of main valve *14in. Piston H.P. Alleo-Richardson Bal. L.P.*	Weight on front truck working order —
Builder's order No. *B-1399*	Firebox length, inside *150⅛ in.*	Weight on drivers working order *466500 lbs.*
	Firebox width, inside *96¼ in.*	Weight on rear truck working order —
	Grate area *81 sq.ft.*	Total weight of engine working order *466500 lbs.*
Number of Locomotives *2*	Tubes, number large *45-5½ in.*	Weight of tender, loaded *156500 lbs.*
These engines have a radial buffer between engine and tender.	Tubes, number small *255-2¼ in.*	Weight of tender, empty *61800 lbs*
Note *Engines are equipped with a power reversing gear, and a Gaines fire brick arch.*	Tubes, length over sheets *23ft.0 in.*	Steam pressure *220 lbs.*
Rating *100.5%*	Heating surface tubes *4924 sq.ft.*	Max. tractive force *100500 lbs.*
	Heating surface firebox and arch tubes *365 sq.ft.*	
	Total heating surface *5289 sq.ft.*	
	Heating surface superheater *1265 sq.ft.*	

CLASS NU-1D

ENGINE NUMBER	DATE BUILT	SUPERHEAT.	VALVE GEAR	SAFETY VALVES	INJECTORS	ENGINEERS BRAKE VALVE EQUIPMENT	STEAM HEAT AIR SIGNAL	AIR PUMP	STAYBOLTS	FIREDOORS	TENDER TRUCKS	WATER SCOOP	ENGINE NUMBER	DATE BUILT	SUPERHEAT.	VALVE GEAR	SAFETY VALVES	INJECTORS	ENGINEERS BRAKE VALVE EQUIPMENT	STEAM HEAT AIR SIGNAL	AIR PUMP	STAYBOLTS	FIREDOORS	TENDER TRUCKS	WATER SCOOP
8700	8-19/16	S	Wal.	3-3½"	2-#11	(2)ET6	No	8½"cc	B.Z.	Pneu.	R.B.	No													
8701	"	S	"	"	"	"	"	"	"	"	"	"													

8701 renumbered NYCRR 7109 July 1, 1936

Engine designed for 18°–0′ curve.

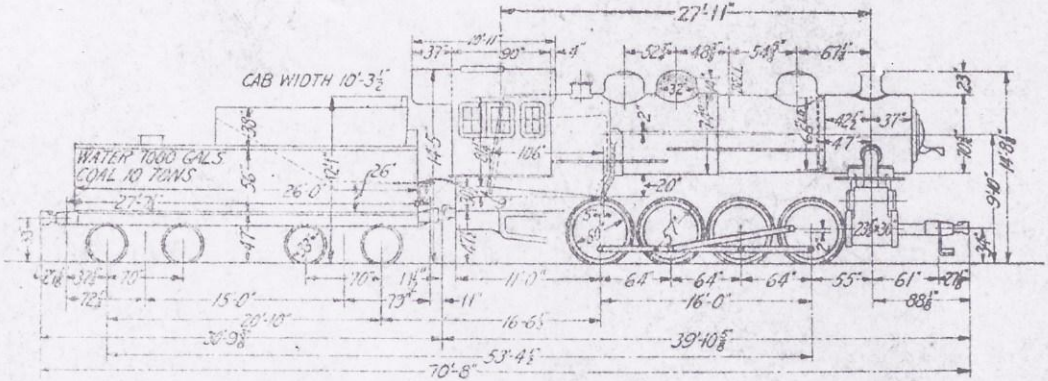

Class	Order No.	Built By	Engine Nos.	No. of Locos.
U-2A	B-1410	A.L.Co.	752 to 774	25
U-2B	L-5395	L.L.W.	685 to 709	25
U-2B	L-5296	L.L.W.	710 to 749	40
U-2D	P-723	A.L.Co.	640 to 684	45
U-2F	L-5459	L.L.W.	200 to 239	40
U-2H	L-5640	L.L.W.	636 to 639	4

MC ~~7~~ 9 LOCOS

Rating 45.7%

Kind of main valve.....12 in. piston
Firebox, length inside.....96⅛ in.
Firebox, width inside.....75¼ in.
Grate area.....50.2 sq. ft.
Tubes, number large.....28 5½ in.
Tubes, number small.....175 2 in.
Tubes, length over sheets.....16 ft. 0 in.
Heating surface tubes.....2098 sq. ft.
Heating surface firebox and arch tubes.....187 sq. ft.

Total heating surface.....2285 sq. ft.
Heating surface, superheater...526 sq. ft.
Weight on Drivers, working order.....217000 lbs.
Total weight of Engine, working order.....217000 lbs.
Weight of Tender, loaded.....137300 lbs.
Weight of Tender, empty.....59000 lbs.
Steam Pressure.....185 lbs.
Max. Tractive Force.....45700 lbs.

CLASS U-2A, U-2B, U-2D, U-2F and U-2H

CLASS U-2A

ENGINE NUMBER	DATE BUILT	SUPERHEATER	VALVE GEAR	ENGINEERS BRAKE VALVE	STEAM HEAT AIR SIGNAL	AIR PUMP	TENDER CAPACITY Gals. Water	TENDER CAPACITY Tons Coal	WATER SCOOP	ENGINE NUMBER	DATE BUILT	SUPERHEATER	VALVE GEAR	ENGINEERS BRAKE VALVE	STEAM HEAT AIR SIGNAL	AIR PUMP	TENDER CAPACITY Gals. Water	TENDER CAPACITY Tons Coal	WATER SCOOP
750	10–1916	S	Baker	L	.....	N.Y. #5	7000	10	.....	763	10–1916	S	Baker	L	.....	N.Y. #5	7000	10	.....
751	"	S	"	"	.....	"	"	"	.....	764	"	S	"	"	.....	"	"	"	.....
752△	"	S	"	"	.....	"	"	"	.....	△765	"	S	"	"	.....	"	"	"	.....
753	"	S	"	"	.....	"	"	"	.....	766	"	S	"	"	.....	"	"	"	.....
754	"	S	"	"	.....	"	"	"	.....	767	"	S	"	"	.....	"	"	"	.....
755△	"	S	"	"	.....	"	"	"	.....	768	"	S	"	"	.....	"	"	"	.....
756△	"	S	"	"	.....	"	"	"	.....	769	"	S	"	"	.....	"	"	"	.....
757	"	S	"	"	.....	"	"	"	.....	770 7470		S	"	"	.....	"	"	"	.....
758	"	S	"	"	.....	"	"	"	.....	771 7471		S	"	"	.....	"	"	"	.....
759	"	S	"	"	.....	"	"	"	.....	772 7472		S	"	"	.....	"	"	"	.....
760△	"	S	"	"	.....	"	"	"	.....	773 7473		S	"	"	.....	"	"	"	.....
761△	"	S	"	"	.....	"	"	"	.....	774 7474		S	"	"	.....	"	"	"	.....
762△	"	S	"	"	.....	"	"	"	.....	.....	.....	.....	.....	.....	.....	.....	.....	.....	.....

△ Indicates engines equipped with fire extinguisher.

ASSIGNED TO M.C.R.R.

770-774-MCRR
707-708-709-MC

ENGINE NUMBER	DATE BUILT	SUPERHEATER	VALVE GEAR	ENGINEERS BRAKE VALVE	STEAM HEAT, AIR SIGNAL	AIR PUMP	TENDER CAPACITY Gals. Water	TENDER CAPACITY Tons Coal	WATER SCOOP	ENGINE NUMBER	DATE BUILT.	SUPERHEATER	VALVE GEAR	ENGINEERS BRAKE VALVE	STEAM HEAT, AIR SIGNAL	AIR PUMP	TENDER CAPACITY Gals. Water	TENDER CAPACITY Tons Coal	WATER SCOOP
										CLASS U-2B									
△685	4-1917	S	Baker	L	.....	W.8½" C.C.	7000	10	.....	~~708~~ 7408	5-1917	S	Baker	L	.....	N.Y.#5	7000	10	.....
△686	"	S	"	"	.....	"	"	"	.....	△~~709~~ 7409	"	S	"	"	.....	"	"	"	.....
△687	"	S	"	"	.....	N.Y.#5	"	"	.....	△710	1-1917	S	"	"	.....	W.8½" C.C.	"	"	.....
688	"	S	"	"	.....	W.8½" C.C.	"	"	.....	△711	"	S	"	"	.....	"	"	"	.....
△689	"	S	"	"	.....	"	"	"	.....	△712	"	S	"	"	.....	"	"	"	.....
690	"	S	"	"	.....	N.Y.#5	"	"	.....	713	"	S	"	"	.....	"	"	"	.....
691	"	S	"	"	.....	"	"	"	.....	714	"	S	"	"	.....	"	"	"	.....
692	"	S	"	"	.....	"	"	"	.....	△715	"	S	"	"	.....	"	"	"	.....
693	"	S	"	"	.....	"	"	"	.....	△716	"	S	"	"	.....	"	"	"	.....
694	"	S	"	"	.....	"	"	"	.....	717	"	S	"	"	S.H.	N.Y.#5	"	"	.....
695	"	S	"	"	.....	"	"	"	.....	718	2-1917	S	"	"	.....	W.8½" C.C.	"	"	.....
696	"	S	"	"	.....	"	"	"	.....	△719	"	S	"	"	.....	"	"	"	.....
697	5-1917	S	"	"	.....	"	"	"	.....	△720	"	S	"	"	.....	"	"	"	.....
698	"	S	"	"	.....	W.8½" C.C.	"	"	.....	△721	"	S	"	"	.....	"	"	"	.....
△699	"	S	"	"	.....	N.Y.#5	"	"	.....	△722	"	S	"	"	.....	N.Y.#5	"	"	.....
700	"	S	"	"	.....	W. 8½" C.C.	"	"	.....	△723	"	S	"	"	.....	W.8½" C.C.	"	"	.....
701	"	S	"	"	.....	N.Y.#5	"	"	.....	724	"	S	"	"	.....	"	"	"	.....
702	"	S	"	"	.....	"	"	"	.....	△725	"	S	"	"	.....	"	"	"	.....
703	"	S	"	"	.....	"	"	"	.....	△726	"	S	"	"	.....	N.Y.#5	"	"	.....
704	"	S	"	"	.....	W-8½" C.C.	"	"	.....	727	"	S	"	"	.....	W.8½" C.C.	"	"	.....
△705	"	S	"	"	.....	N.Y.#5	"	"	.....	728	"	S	"	"	.....	"	"	"	.....
706	"	S	"	"	.....	W.8½" C.C.	"	"	.....	△729	"	S	"	"	.....	"	"	"	.....
~~707~~ 7407		S	"	"	.....	"	"	"	.....	.....	.....	.....	.....	.....	.....	.....	.....	.....	.....
.....	.....	.....	.....	.....	.....	.....	.....	.....	.....	.....	.....	.....	.....	.....	.....	.....	.....	.....	.....

△ Indicates engines equipped with fire extinguisher.

7407 - 7408 - 7409 → M.C. Locos.
707, 708 & 709

M. C. R. R.

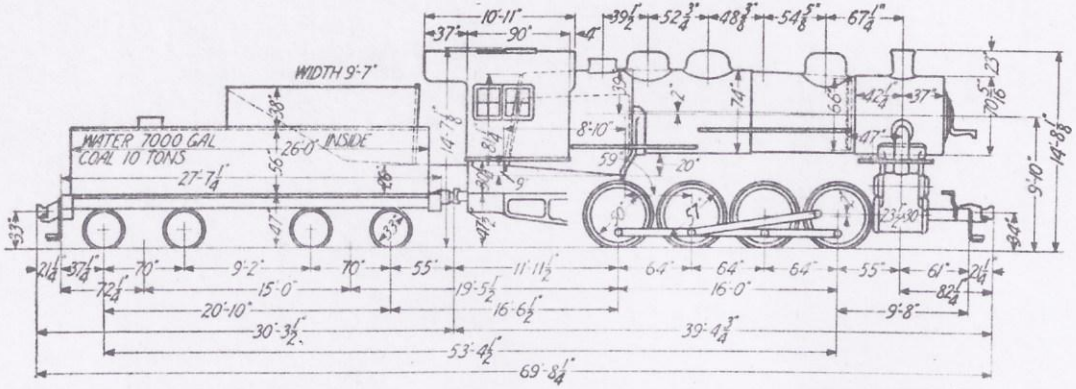

Built by the	Lima Locomotive Wks., Inc.	Kind of main valve	12 in. Piston	Weight on front truck working order	———
Builder's order No.	L-5311	Firebox length, inside	96⅛ in.	Weight on drivers working order	215500 lbs.
		Firebox width, inside	75¼ in.	Weight on rear truck working order	———
		Grate area	50.2 sq. ft.	Total weight of engine working order	215500 lbs.
		Tubes, number large	28-5⅝ in.	Weight of tender, loaded	135600 lbs.
Number of Locomotives	10	Tubes, number small	177-2 in.	Weight of tender, empty	57300 lbs.
These engines have a radial buffer between engine and tender.		Tubes, length over sheets	16 ft. 0 in.	Steam pressure	185 lbs.
Note	Engines are equipped with a Ragonnet power reversing gear.	Heating surface tubes	2115. sq. ft.	Max. tractive force	45700 lbs.
Rating	45.7%	Heating surface firebox and arch tubes	178.5 sq. ft.		
		Total heating surface	2293.5 sq. ft.		
		Heating surface superheater	540. sq. ft.		

CLASS U-2c

ENGINE NUMBER	DATE BUILT	SUPERHEAT.	VALVE GEAR	SAFETY VALVES	INJECTORS	ENGINEERS BRAKE VALVE EQUIPMENT	STEAM HEAT AIR SIGNAL	AIR PUMP	STAYBOLTS	FIREDOORS	TENDER TRUCKS	WATER SCOOP	ENGINE NUMBER	DATE BUILT	SUPERHEAT.	VALVE GEAR	SAFETY VALVES	INJECTORS	ENGINEERS BRAKE VALVE EQUIPMENT	STEAM HEAT AIR SIGNAL	AIR PUMP	STAYBOLTS	FIREDOORS	TENDER TRUCKS	WATER SCOOP
7504	3-1917	S	B.	2-3½"	2-#E	ET6	No	8½"cc	B.Z.	Pneu.	R.B.	No	7509	3-1917	S	B.	2-3½"	2-#E	ET6	No	8½"cc	B.Z.	Pneu.	R.B.	No
7505	"	S	"	"	"	"	"	"	"	"	"	"	7550	"	S	"	"	"	"	"	"	"	"	"	"
7506	"	S	"	"	"	"	"	"	"	"	"	"	7551	"	S	"	"	"	"	"	"	"	"	"	"
7507	"	S	"	"	"	"	"	"	"	"	"	"	7552	"	S	"	"	"	"	"	"	"	"	"	"
7508	"	S	"	"	"	"	"	"	"	"	"	"	7553	"	S	"	"	"	"	"	"	"	"	"	"

Old No	New No.
8904	7504
to	to
8909	7509
8550	7550
to	to
8553	7553

ENGINE NUMBER	DATE BUILT	SUPERHEATER	VALVE GEAR	ENGINEERS BRAKE VALVE	STEAM HEAT, AIR SIGNAL	AIR PUMP	TENDER CAPACITY Gals. Water	TENDER CAPACITY Tons Coal	WATER SCOOP	ENGINE NUMBER	DATE BUILT	SUPERHEATER	VALVE GEAR	ENGINEERS BRAKE VALVE	STEAM HEAT, AIR SIGNAL	AIR PUMP	TENDER CAPACITY Gals. Water	TENDER CAPACITY Tons Coal	WATER SCOOP
640	8-1917	S	Baker	L	.....	N.Y.#5	7000	10	.....	663	11-1917	S	Baker	L	.....	N.Y.#5	7000	10	.....
641	"	S	"	"	.....	"	"	"	.....	664	"	S	"	"	.....	W.8½" C.C.	"	"	.....
642	"	S	"	"	.....	W.8½" C.C.	"	"	.....	665	"	S	"	"	.....	"	"	"	.....
643	"	S	"	"	.....	N.Y.#5	"	"	.....	666	"	S	"	"	.....	N.Y.#5	"	"	.....
644	"	S	"	"	.....	"	"	"	.....	667	"	S	"	"	.....	"	"	"	.....
645	"	S	"	"	.....	"	"	"	.....	668	"	S	"	"	.....	"	"	"	.....
646	"	S	"	"	.....	"	"	"	.....	669	"	S	"	"	.....	"	"	"	.....
△647	"	S	"	"	.....	"	"	"	.....	670	12-1917	S	"	"	.....	"	"	"	.....
648	"	S	"	"	.....	"	"	"	.....	△671	"	S	"	"	.....	"	"	"	.....
△649	"	S	"	"	.....	"	"	"	.....	672	"	S	"	"	.....	"	"	"	.....
650	9-1917	S	"	"	.....	W.8½" C.C.	"	"	.....	673	"	S	"	"	.....	"	"	"	.....
△651	"	S	"	"	.....	"	"	"	.....	674	"	S	"	"	.....	"	"	"	.....
652	10-1917	S	"	"	.....	"	"	"	.....	△675	"	S	"	"	.....	"	"	"	.....
△653	"	S	"	"	.....	N.Y.#5	"	"	.....	676	"	S	"	"	.....	"	"	"	.....
654	"	S	"	"	.....	W.8½" C.C.	"	"	.....	677	"	S	"	"	.....	"	"	"	.....
△655	"	S	"	"	.....	"	"	"	.....	678	1-1918	S	"	"	.....	"	"	"	.....
656	"	S	"	"	.....	"	"	"	.....	679	"	S	"	"	.....	"	"	"	.....
657	"	S	"	"	.....	"	"	"	.....	[illegible]	"	S	"	"	.....	"	"	"	.....
658	11-1917	S	"	"	.....	N.Y.#5	"	"	.....	681	"	S	"	"	.....	"	"	"	.....
659	"	S	"	"	.....	W.8½" C.C.	"	"	.....	682	"	S	"	"	.....	"	"	"	.....
△660	"	S	"	"	.....	"	"	"	.....	683	"	S	"	"	.....	"	"	"	.....
661	"	S	"	"	.....	"	"	"	.....	684	"	S	"	"	.....	"	"	"	.....
662	"	S	"	"	.....	N.Y.#5	"	"	.....	.....	.....	.....	.....	.....	.....	.....	.....	.....	.....

△ Indicates engines equipped with fire extinguisher.

7380

ASSIGNED TO M.C.R.R.

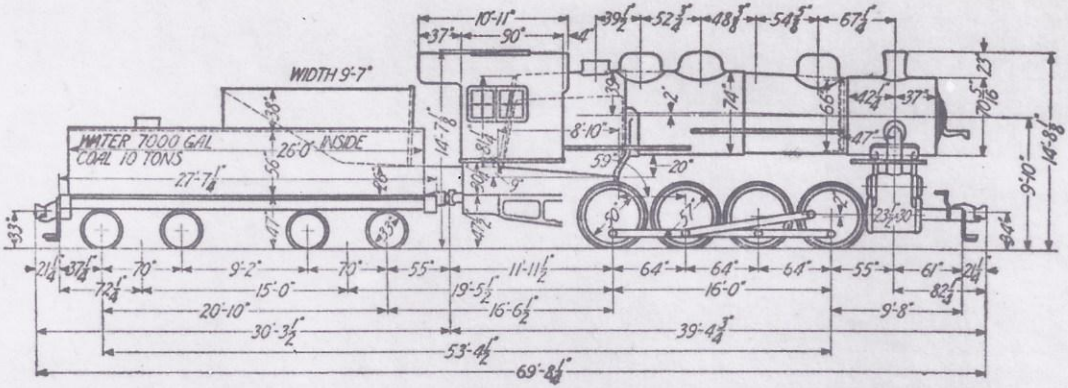

Built by the Lima Locomotive Works, Inc.	Kind of main valve ... 12 in. Piston	Weight on front truck working order ... ———
Builder's order No. L-5439	Firebox length, inside ... 96⅛ in.	
	Firebox width, inside ... 75¼ in.	Weight on drivers working order ... 216500 lbs.
	Grate area ... 50.2 sq. ft.	
Number of Locomotives 20	Tubes, number large ... 28-5½ in.	Weight on rear truck working order ... ———
These engines have a radial buffer between engine and tender.	Tubes, number small ... 177-2 in.	
	Tubes, length over sheets ... 16 ft. 0 in.	Total weight of engine working order ... 216500 lbs.
Note Engines are equipped with a Ragonnet power reversing gear.	Heating surface tubes ... 2115 sq. ft.	Weight of tender, loaded ... 135900 lbs.
	Heating surface firebox and arch tubes ... 178.5 sq. ft.	Weight of tender, empty ... 57600 lbs.
Rating 45.7%	Total heating surface ... 2293.5 sq. ft.	Steam pressure ... 185 lbs.
	Heating surface superheater ... 540 sq. ft.	Max. tractive force ... 45700 lbs.

CLASS U-2E

ENGINE NUMBER	DATE BUILT	SUPERHEAT.	VALVE GEAR	SAFETY VALVES	INJECTORS	ENGINEERS BRAKE VALVE EQUIPMENT	STEAM HEAT AIR SIGNAL	AIR PUMP	STAYBOLTS	FIREDOORS	TENDER TRUCKS	WATER SCOOP	ENGINE NUMBER	DATE BUILT	SUPERHEAT.	VALVE GEAR	SAFETY VALVES	INJECTORS	ENGINEERS BRAKE VALVE EQUIPMENT	STEAM HEAT AIR SIGNAL	AIR PUMP	STAYBOLTS	FIREDOORS	TENDER TRUCKS	WATER SCOOP
7510	6-1917	S	B.	2-3½"	2-#11	ET6	No	8½"cc	B.Z.	Pneu.	R.B.	No	7520	7-1917	S	B.	2-3½"	2-#11	ET6	No	8½"cc	B.Z.	Pneu.	R.B.	No
7511	"	S	"	"	"	"	"	"	"	"	"	"	7521	"	S	"	"	"	"	"	"	"	"	"	"
7512	"	S	"	"	"	"	"	"	"	"	"	"	7522	"	S	"	"	"	"	"	"	"	"	"	"
7513	"	S	"	"	"	"	"	"	"	"	"	"	7523	"	S	"	"	"	"	"	"	"	"	"	"
7514	"	S	"	"	"	"	"	"	"	"	"	"	7524	"	S	"	"	"	"	"	"	"	"	"	"
7515	"	S	"	"	"	"	"	"	"	"	"	"	7525	"	S	"	"	"	"	"	"	"	"	"	"
7516	7-1917	S	"	"	"	"	"	"	"	"	"	"	7526	"	S	"	"	"	"	"	"	"	"	"	"
7517	"	S	"	"	"	"	"	"	"	"	"	"	7527	8-1917	S	"	"	"	"	"	"	"	"	"	"
7518	"	S	"	"	"	"	"	"	"	"	"	"	7528	"	S	"	"	"	"	"	"	"	"	"	"
7519	"	S	"	"	"	"	"	"	"	"	"	"	7529	"	S	"	"	"	"	"	"	"	"	"	"

M.C.R.R. Old No's 8910 to 8929

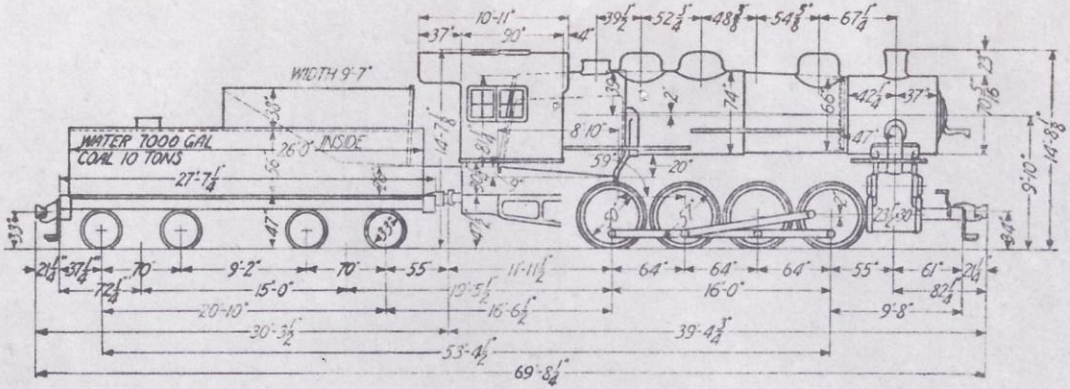

Built by the *Lima Locomotive Works, Inc.*	**Kind of main valve** *12 in. Piston.*	**Weight on front truck working order** ———
Builder's order No. *L-5630*	**Firebox length, inside** *96⅛ in.*	**Weight on drivers working order** *216500 lbs.*
	Firebox width, inside *75¼ in.*	**Weight on rear truck working order** ———
Number of Locomotives *10*	**Grate area** *50.2 sq. ft.*	**Total weight of engine working order** *216500 lbs.*
These engines have a radial buffer between engine and tender.	**Tubes, number large** *28-5½ in.*	**Weight of tender, loaded** *135900 lbs.*
Note *Engines are equipped with a Ragonnet power reversing gear.*	**Tubes, number small** *177-2 in.*	**Weight of tender, empty** *57600 lbs.*
Rating *45.7%*	**Tubes, length over sheets** *16 ft. 0 in.*	**Steam pressure** *185 lbs.*
	Heating surface tubes *2115 sq. ft.*	**Max. tractive force** *45700 lbs.*
	Heating surface firebox and arch tubes *178.5 sq. ft.*	
	Total heating surface *2293.5 sq. ft.*	
	Heating surface superheater *540 sq. ft.*	

CLASS U-2G

ENGINE NUMBER	DATE BUILT	SUPERHEAT.	VALVE GEAR	SAFETY VALVES	INJECTORS	ENGINEERS BRAKE VALVE EQUIPMENT	STEAM HEAT AIR SIGNAL	AIR PUMP	STAYBOLTS	FIREDOORS	TENDER TRUCKS	WATER SCOOP	ENGINE NUMBER	DATE BUILT	SUPERHEAT.	VALVE GEAR	SAFETY VALVES	INJECTORS	ENGINEERS BRAKE VALVE EQUIPMENT	STEAM HEAT AIR SIGNAL	AIR PUMP	STAYBOLTS	FIREDOORS	TENDER TRUCKS	WATER SCOOP
7530	6-1918	S	B.	2-3½"	2-#11	ET6	S.H.	8½"cc	B.Z.	Pneu	R.B.	No	7535	6-1918	S	B.	2-3½"	2-#11	ET6	No	8½"cc	B.Z.	Pneu	R.B.	No
7531	"	S	"	"	"	"	No	"	"	"	"	"	7536	"	S	"	"	"	"	S.H.	"	"	"	"	"
7532	"	S	"	"	"	"	S.H.	"	"	"	"	"	7537	"	S	"	"	"	"	No	"	"	"	"	"
7533	"	S	"	"	"	"	No	"	"	"	"	"	7538	"	S	"	"	"	"	"	"	"	"	"	"
7534	"	S	"	"	"	"	"	"	"	"	"	"	7539	"	S	"	"	"	"	"	"	"	"	"	"

Old No's MCRR 8930-8939

M.C.R.R.

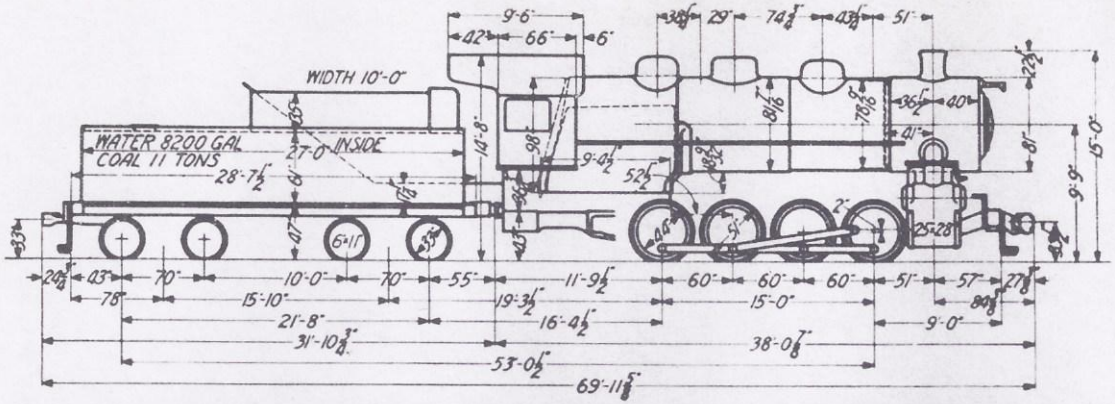

Built by the Lima Locomotive Works, Inc.	**Kind of main valve** 14 in. Piston	**Weight on front truck working order** ———
	Firebox length, inside 102⅞ in.	
Builder's order No. L-5906	**Firebox width, inside** 66¼ in.	**Weight on drivers working order** 214000 lbs.
	Grate area 47 sq. ft.	
U.S.R.A. 0-8-0	**Tubes, number large** 36-5½ in.	**Weight on rear truck working order** ———
Number of Locomotives 10	**Tubes, number small** 230-2 in.	
	Tubes, length over sheets 15 ft. 0 in.	**Total weight of engine working order** 214000 lbs.
	Heating surface tubes 2569 sq. ft.	
Note Engines are equipped with "Lewis" power reverse gears and F.R.S.Co. radial buffer.	**Heating surface firebox and arch tubes** 208 sq. ft.	**Weight of tender, loaded** 153800 lbs.
		Weight of tender, empty 63500 lbs.
Rating 52.5%	**Total heating surface** 2777 sq. ft.	**Steam pressure** 180 lbs.
Factor of adhesion 4.07	**Heating surface superheater** 637 sq. ft.	**Max. tractive force** 52500 lbs.

CLASS U-3a

ENGINE NUMBER	DATE BUILT	SUPERHEAT.	VALVE GEAR	SAFETY VALVES	INJECTORS	ENGINEERS BRAKE VALVE EQUIPMENT	STEAM HEAT AIR SIGNAL	AIR PUMP	STAYBOLTS	FIREDOORS	TENDER TRUCKS	WATER SCOOP	ENGINE NUMBER	DATE BUILT	SUPERHEAT.	VALVE GEAR	SAFETY VALVES	INJECTORS	ENGINEERS BRAKE VALVE EQUIPMENT	STEAM HEAT AIR SIGNAL	AIR PUMP	STAYBOLTS	FIREDOORS	TENDER TRUCKS	WATER SCOOP
7840	1-1920	S	B	3-3"	2-#11	ET6	No	8½"cc	BZ	Pneu	RB	No	7845	2-1920	S	B	3-3"	2-#11	ET6	No	8½"cc	BZ	Pneu	RB	No
7841	"	S	"	"	"	"	"	"	"	"	"	"	7846	"	S	"	"	"	"	"	"	"	"	"	"
7842	"	S	"	"	"	"	"	"	"	"	"	"	7847	"	S	"	"	"	"	"	"	"	"	"	"
7843	"	S	"	"	"	"	"	"	"	"	"	"	7848	"	S	"	"	"	"	"	"	"	"	"	"
7844	"	S	"	"	"	"	S.H.	"	"	"	"	"	7849	"	S	"	"	"	"	"	"	"	"	"	"

Old MCRR No's 8940-8949

M.C.R.R.

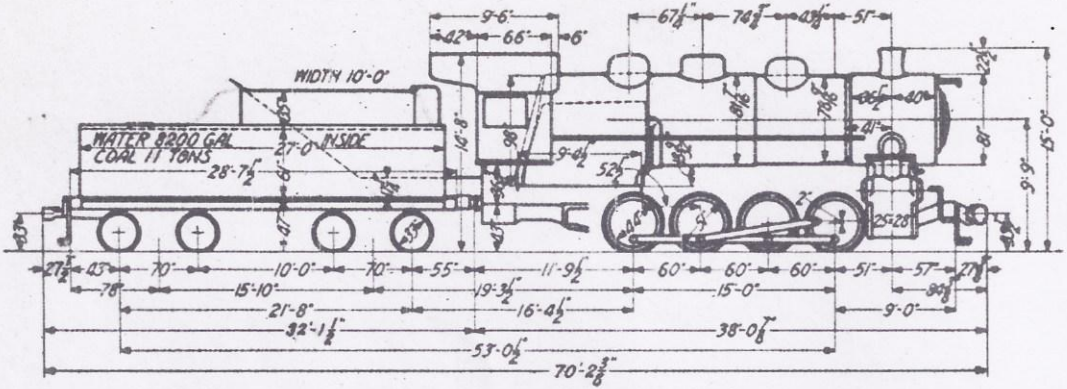

Built by the Lima Loco. Works, Inc.		Kind of main valve	14" Piston	Weight on front truck working order	———
Builder's order No. L-1017		Firebox length, inside	102½ in.	Weight on drivers working order	219000 lbs.
		Firebox width, inside	66½ in.		
		Grate area	47 sq.ft.		
Number of Locomotives 6		Tubes, number large	36-5½ in.	Weight on rear truck working order	———
Locos. are equipped with a "Ragonnet" power reverse gear, F.R.S.Co. radial buffer and F.R.S.Co. adjustable wedges.		Tubes, number small	230-2 in.		
		Tubes, length over sheets	15 Ft. 0 in.	Total weight of engine working order	219000 lbs.
		Heating surface tubes	2569 sq.ft.		
		Heating surface firebox and arch tubes	208 sq.ft.	Weight of tender, loaded	153800 lbs.
				Weight of tender, empty	63500 lbs.
Rating 52.5%		Total heating surface	2777 sq.ft.	Steam pressure	180 lbs.
Factor of adhesion	4.17	Heating surface superheater	637 sq.ft.	Max. tractive force	52500 lbs.

CLASS U-3B

ENGINE NUMBER	DATE BUILT	SUPERHEAT.	VALVE GEAR	SAFETY VALVES	INJECTORS	ENGINEERS BRAKE VALVE EQUIPMENT	STEAM HEAT AIR SIGNAL	AIR PUMP	STAYBOLTS	FIREDOORS	TENDER TRUCKS	WATER SCOOP	ENGINE NUMBER	DATE BUILT	SUPERHEAT.	VALVE GEAR	SAFETY VALVES	INJECTORS	ENGINEERS BRAKE VALVE EQUIPMENT	STEAM HEAT AIR SIGNAL	AIR PUMP	STAYBOLTS	FIREDOORS	TENDER TRUCKS	WATER SCOOP
7850	12-1920	S	B.	3-3"	2-#11	ET6	No	8½"CC	BZ	Pneu	RB	No	7853	1-1921	S	B.	3-3"	2-#11	ET6	No	8½"CC	BZ	Pneu.	RB	No
7851	"	S	"	"	"	"	"	"	"	"	"	"	7854	3-1921	S	"	"	"	"	"	"	"	"	"	"
7852	1-1921	S	"	"	"	"	"	"	"	"	"	"	7855	4-1921	S	"	"	"	"	"	"	"	"	"	"

Old MCRR No's 8950-8955

MCRR

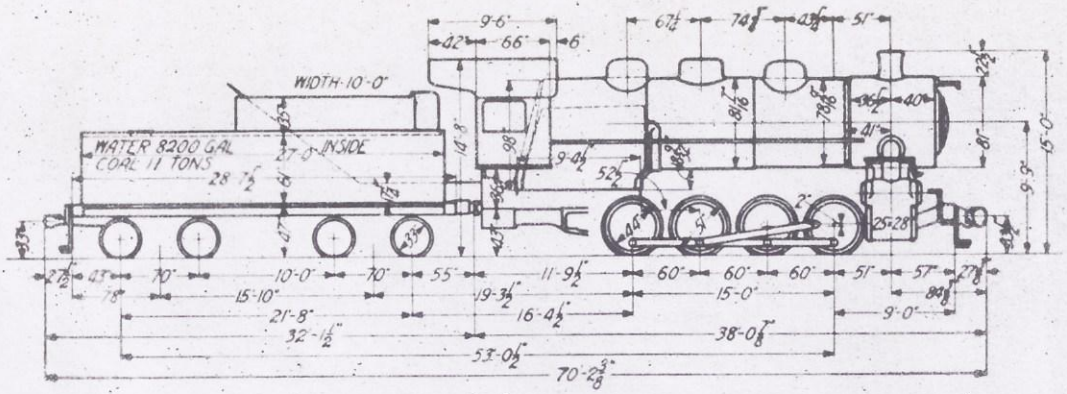

Built by the Lima Locomotive Works, Inc.	**Kind of main valve**	14 in. Piston	**Weight on front truck**		
	Firebox length, inside	102⅛ in.	**working order**		
Builder's order No. L-1030	**Firebox width, inside**	66¼ in.	**Weight on drivers**		
	Grate area	47 sq. ft.	**working order**	219000 lbs.	
	Tubes, number large	36 5½ in.	**Weight on rear truck**		
Number of Locomotives 10	**Tubes, number small**	230 2 in.	**working order**		
Locos. are equipped with a "Ragonnet" power	**Tubes, length over sheets**	15 Ft. 0 in.	**Total weight of engine**		
reverse gear, F.R.S. Co. radial buffer and	**Heating surface tubes**	2569 sq. ft.	**working order**	219000 lbs.	
adjustable wedges	**Heating surface firebox**		**Weight of tender, loaded**	153800 lbs.	
	and arch tubes	208 sq. ft.	**Weight of tender, empty**	63500 lbs.	
Rating 52.5%	**Total heating surface**	2777 sq. ft.	**Steam pressure**	180 lbs.	
Factor of adhesion A.C.	**Heating surface superheater**	610 sq. ft.	**Max. tractive force**	52500 lbs.	

CLASS U-3c

ENGINE NUMBER	DATE BUILT	SUPERHEAT.	VALVE GEAR	SAFETY VALVES	INJECTORS	ENGINEERS BRAKE VALVE EQUIPMENT	STEAM HEAT AIR SIGNAL	AIR PUMP	STAYBOLTS	FIREDOORS	TENDER TRUCKS	WATER SCOOP	ENGINE NUMBER	DATE BUILT	SUPERHEAT.	VALVE GEAR	SAFETY VALVES	INJECTORS	ENGINEERS BRAKE VALVE EQUIPMENT	STEAM HEAT AIR SIGNAL	AIR PUMP	STAYBOLTS	FIREDOORS	TENDER TRUCKS	WATER SCOOP
7856	8-1922	S	B.	3-3"	2-#11	ET6	No	8½"00	BZ	Pneu	RB	No	7861	9-1922	S	B.	3-3"	2-#11	ET6	No	8½"cc	BZ	Pneu	RB	No
7857	"	S	"	"	"	"	"	"	"	"	"	"	7862	"	S	"	"	"	"	"	"	"	"	"	"
7858	"	S	"	"	"	"	"	"	"	"	"	"	7863	"	S	"	"	"	"	"	"	"	"	"	"
7859	9-1922	S	"	"	"	"	"	"	"	"	"	"	7864	"	S	"	"	"	"	"	"	"	"	"	"
7860	"	S	"	"	"	"	"	"	"	"	"	"	7865	"	S	"	"	"	"	"	"	"	"	"	"

Old MCRR No's 8956-8965

M.C.R.R

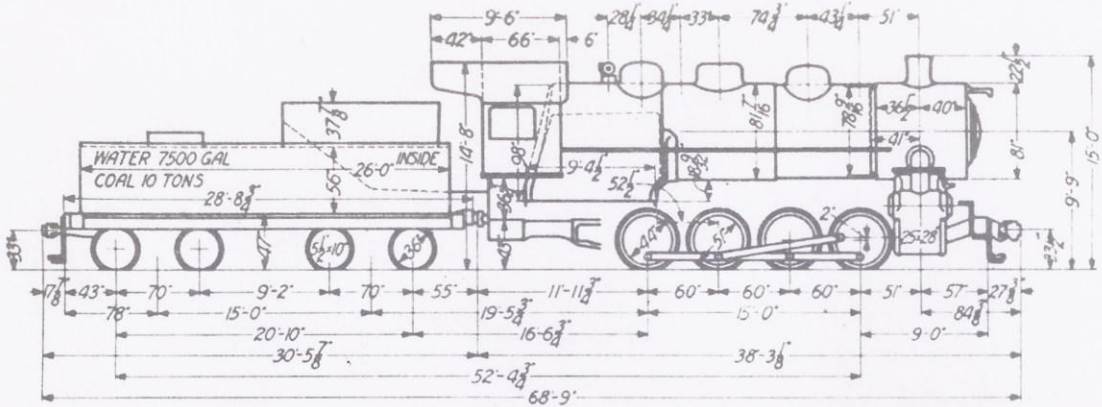

Built by the Lima Loco. Wks. Inc. & American Locomotive Co., Schenectady **Works.**	**Kind of main valve** 14 in. Piston	**Weight on front truck working order** ———
Builder's order No.	**Firebox length, inside** 102⅛ in.	**Weight on drivers working order** †216500 lbs. *219500 lbs.
Engines 8966 to 8970 - Am. Loco. Co., S-1469	**Firebox width, inside** 66¼ in.	**Weight on rear truck working order** ———
Engines 8971 to 8975 - Lima Loco. Wks. Inc., L-1064	**Grate area** 47 sq. ft.	**Total weight of engine working order** †216500 lbs. *219500 lbs.
Number of Locomotives 10	**Tubes, number large** 36-5½ in.	**Weight of tender, loaded** 150700 lbs.
*Refers to Engines 8966 to 8970	**Tubes, number small** 230-2 in.	**Weight of tender, empty** 68200 lbs.
†Refers to Engines 8971 to 8975	**Tubes, length over sheets** 15 ft. 0 in.	**Steam pressure** 180 lbs.
Note Engines are equipped with "Ragonnet" power reverse gears and adjustable driving box wedges.	**Heating surface tubes** 2569 sq. ft.	**Max. tractive force** 52500 lbs.
Rating 52.5%	**Heating surface firebox and arch tubes** 208 sq. ft.	
Factor of adhesion † 4.10 & * 4.18	**Total heating surface** 2777 sq. ft.	
	Heating surface superheater 610 sq. ft.	

CLASS U-3E

ENGINE NUMBER	DATE BUILT	SUPERHEAT.	VALVE GEAR	SAFETY VALVES	INJECTORS	ENGINEERS BRAKE VALVE EQUIPMENT	STEAM HEAT AIR SIGNAL	AIR PUMP	STAYBOLTS	FIREDOORS	TENDER TRUCKS	WATER SCOOP	ENGINE NUMBER	DATE BUILT	SUPERHEAT.	VALVE GEAR	SAFETY VALVES	INJECTORS	ENGINEERS BRAKE VALVE EQUIPMENT	STEAM HEAT AIR SIGNAL	AIR PUMP	STAYBOLTS	FIREDOORS	TENDER TRUCKS	WATER SCOOP
7866	6-1924	S	B.	3-3"	2-#11	ET6	No	8½"cc	BZ	Pneu	RB	No	7871	6-1924	S	B.	3-3"	2-#11	ET6	No	8½"cc	BZ	Pneu.	RB	No
7867	"	S	"	"	"	"	"	"	"	"	"	"	7872	"	S	"	"	"	"	"	"	"	"	"	"
7868	"	S	"	"	"	"	"	"	"	"	"	"	7873	"	S	"	"	"	"	"	"	"	"	"	"
7869	"	S	"	"	"	"	"	"	"	"	"	"	7874	"	S	"	"	"	"	"	"	"	"	"	"
7870	"	S	"	"	"	"	"	"	"	"	"	"	7875	"	S	"	"	"	"	"	"	"	"	"	"

Old MCRR No's 8966-8975

M.C.R.R.

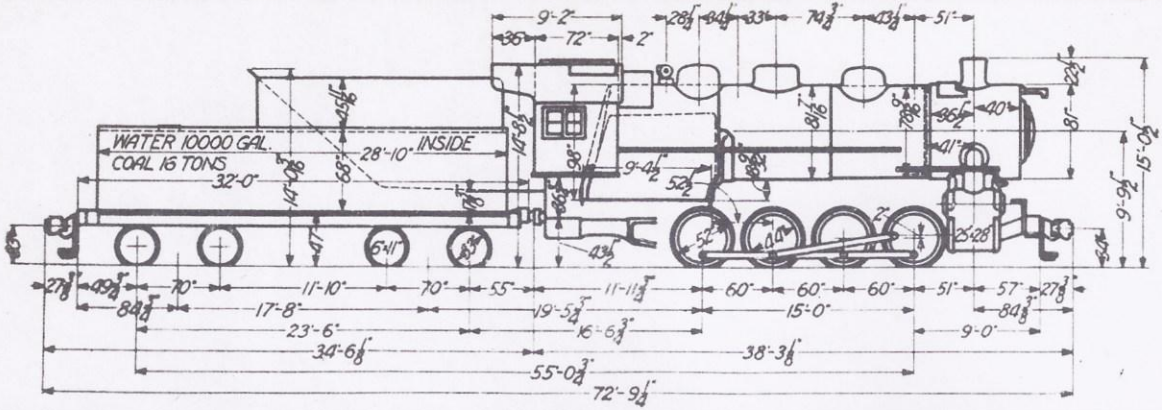

Built by the *American Locomotive Co.*	**Kind of main valve** *14 in. Piston.*	**Weight on front truck** working order ———
Brooks **Works.**	**Firebox length, inside** *102⅛ in.*	
Builder's order No. *B-1691*	**Firebox width, inside** *66¼ in.*	**Weight on drivers** working order *222500 lbs.*
	Grate area *47 sq. ft.*	
	Tubes, number large *36-5½ in.*	**Weight on rear truck** working order ———
Number of Locomotives *10*	**Tubes, number small** *230-2 in.*	
Engines are equipped with "Ragonnet"	**Tubes, length over sheets** *15 ft. 0 in.*	**Total weight of engine** working order *222500 lbs.*
power reverse gear, adjustable driving box	**Heating surface tubes** *2569 sq. ft.*	
wedges and multiple throttle.	**Heating surface firebox and arch tubes** *208 sq. ft.*	**Weight of tender, loaded** *189500 lbs.*
Engines designed for 19° curve		**Weight of tender, empty** *72600 lbs.*
Rating *52.9%*	**Total heating surface** *2777 sq. ft.*	**Steam pressure** *185 lbs.*
Factor of adhesion 4.20	**Heating surface superheater** *654 sq. ft.*	**Max. tractive force** *52920 lbs.*

CLASS U-3H

ENGINE NUMBER	DATE BUILT	SUPERHEAT.	VALVE GEAR	SAFETY VALVES	INJECTORS	ENGINEERS BRAKE VALVE EQUIPMENT	STEAM HEAT AIR SIGNAL	AIR PUMP	STAYBOLTS	FIREDOORS	TENDER TRUCKS	WATER SCOOP	ENGINE NUMBER	DATE BUILT	SUPERHEAT.	VALVE GEAR	SAFETY VALVES	INJECTORS	ENGINEERS BRAKE VALVE EQUIPMENT	STEAM HEAT AIR SIGNAL	AIR PUMP	STAYBOLTS	FIREDOORS	TENDER TRUCKS	WATER SCOOP
7876	12-1926	S	B.	3-3"	2-#11	ET6	No	8½"CC	BZ	Pneu	RB	No	7881	12-1926	S	B.	3-3"	2-#11	ET6	No	8½"CC	BZ	Pneu	RB	No
7877	"	S	"	"	"	"	"	"	"	"	"	"	7882	"	S	"	"	"	"	"	"	"	"	"	"
7878	"	S	"	"	"	"	"	"	"	"	"	"	7883	"	S	"	"	"	"	"	"	"	"	"	"
7879	"	S	"	"	"	"	"	"	"	"	"	"	7884	"	S	"	"	"	"	"	"	"	"	"	"
7880	"	S	"	"	"	"	"	"	"	"	"	"	7885	"	S	"	"	"	"	"	"	"	"	"	"

Old MCRR No's 8976-8985

Engine designed for 19°-0′ curve.

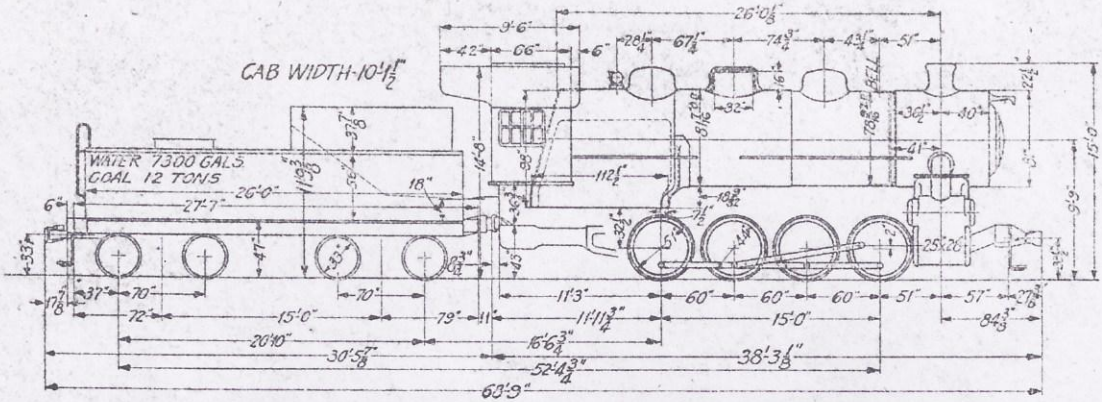

Class	Order No.	Built By	Engine Nos.	No. of Locos.
U-3E	S-1469	A.L.Co.	4300 to 4324	25
U-3F	S-1480	A.L.Co.	4325 to 4244	20
U-3F	L-1069	L.I. WK'S.	4345 to 4349	5

Rating 51.0%

Kind of main valve	14 in. piston
Firebox, length inside	102⅛ in.
Firebox, width inside	66¼ in.
Grate area	47 sq. ft.
Tubes, number large	36 5½ in.
Tubes, number small	230 2 in.
Tubes, length over sheets	15 ft. 0 in.
Heating surface tubes	2569 sq. ft.
Heating surface firebox and arch tubes	208 sq. ft.

Total heating surface	2777 sq. ft.
Heating surface, superheater	637 sq. ft.
Weight on Drivers, working order	219000 lbs.
Total weight of Engine, working order	219000 lbs.
Weight of Tender, loaded	139600 lbs.
Weight of Tender, empty	54800 lbs.
Steam Pressure	175 lbs.
Max. Tractive Force	51040 lbs.

ENGINE NUMBER	DATE BUILT	SUPERHEATER	VALVE GEAR	ENGINEERS BRAKE VALVE	STEAM HEAT, AIR SIGNAL	AIR PUMP	TENDER CAPACITY Gals. Water	TENDER CAPACITY Tons Coal	WATER SCOOP	ENGINE NUMBER	DATE BUILT	SUPERHEATER	VALVE GEAR	ENGINEERS BRAKE VALVE	STEAM HEAT, AIR SIGNAL	AIR PUMP	TENDER CAPACITY Gals. Water	TENDER CAPACITY Tons Coal	WATER SCOOP
CLASS U3E																			
4300	5-1924	S	Baker	H-6	.....	W.8½" C.C.	7300	12	.....	4313	5-1924	S	Baker	H-6	.....	W.8½" C.C.	7300	12	.....
4301	"	S	"	"	.....	"	"	"	.....	4314	"	S	"	"	.....	"	"	"	.....
4302	"	S	"	"	.....	"	"	"	.....	4315	"	S	"	"	.....	"	"	"	.....
4303	"	S	"	"	.....	"	"	"	.....	△4316	"	S	"	"	.....	"	"	"	.....
4304	"	S	"	"	.....	"	"	"	.....	△4317	"	S	"	"	.....	"	"	"	.....
4305	"	S	"	"	.....	"	"	"	.....	△4318	"	S	"	"	.....	"	"	"	.....
4306	"	S	"	"	.....	"	"	"	.....	△4319	"	S	"	"	.....	"	"	"	.....
4307	"	S	"	"	.....	"	"	"	.....	△4320	"	S	"	"	.....	"	"	"	.....
4308	"	S	"	"	.....	"	"	"	.....	4321	"	S	"	"	.....	"	"	"	.....
4309	"	S	"	"	.....	"	"	"	.....	4322	"	S	"	"	.....	"	"	"	.....
4310	"	S	"	"	.....	"	"	"	.....	4323	"	S	"	"	.....	"	"	"	.....
4311	"	S	"	"	.....	"	"	"	.....	4324	"	S	"	"	.....	"	"	"	.....
4312	"	S	"	"	.....	"	"	"	.....	.....	.....	.....	.....	.....	.....	.....	.....	.....	.....
CLASS U-3F																			
4325	10-1924	S	Baker	H-6	.....	W.8½" C.C.	7300	12	.....	4338	10-1924	S	Baker	H-6	.....	W.8½" C.C.	7300	12	.....
4326	"	S	"	"	.....	"	"	"	.....	△4339	"	S	"	"	.....	"	"	"	.....
4327	"	S	"	"	.....	"	"	"	.....	[illegible]	"	S	"	"	.....	"	"	"	.....
4328	"	S	"	"	.....	"	"	"	.....	4341	"	S	"	"	.....	"	"	"	.....
4329	"	S	"	"	.....	"	"	"	.....	4342	"	S	"	"	.....	"	"	"	.....
4330	"	S	"	"	.....	"	"	"	.....	4343	"	S	"	"	.....	"	"	"	.....
4331	"	S	"	"	.....	"	"	"	.....	4344	"	S	"	"	.....	"	"	"	.....
4332	"	S	"	"	.....	"	"	"	.....	4345	11-1924	S	"	"	.....	"	"	"	.....
4333	"	S	"	"	.....	"	"	"	.....	4346	"	S	"	"	.....	"	"	"	.....
4334	"	S	"	"	.....	"	"	"	.....	4347	"	S	"	"	.....	"	"	"	.....
4335	"	S	"	"	.....	"	"	"	.....	4348	"	S	"	"	.....	"	"	"	.....
△4336	"	S	"	"	.....	"	"	"	.....	4349	"	S	"	"	.....	"	"	"	.....
△4337	"	S	"	"	.....	"	"	"	.....	.....	.....	.....	.....	.....	.....	.....	.....	.....	.....

△ Indicates engines equipped with fire extinguisher.

ASSIGNED TO MCRR

RECAPITULATION OF LOCOMOTIVES BY CLASSES

CLASSES	1935				1936				1937				1938				1939				1940			
	Mar.	June	Sept.	Dec.	Mar.	June	Sept.	Dec.	Mar.	June	Sept.	Dec.	Mar.	June	Sept.	Dec.	Mar.	June	Sept.	Dec.	Mar.	June	Sept.	Dec.
B-10 F		10				2				2														
B-10 N		12								10														
B-10 R		5				4				3														
B-10 W		19						20		20														
B-10 X		4								4														
Total Class B-10		50				41		42		39														
B-11 A		12								11														
B-11 B		3								3														
B-11 C		10								10														
B-11 E		15								13														
B-11 G		10								10														
Total Class B-11		48				47				47														

M.C.R.R.

RECAPITULATION OF LOCOMOTIVES BY CLASSES

CLASSES	1935				1936				1937				1938				1939				1940			
	Mar.	June	Sept.	Dec.	Mar.	June	Sept.	Dec.	Mar.	June	Sept.	Dec.	Mar.	June	Sept.	Dec.	Mar.	June	Sept.	Dec.	Mar.	June	Sept.	Dec.
B-84 A		1																						
B-84 C		1																						
Total Class B-84		2																						
Total Type "B"		100																						
DEs-3		3																						
F-82		2																						
F-82 B		1																						
F-82 C		3																						
F-82 D		2																						
Total Class F-82		8																						

RECAPITULATION OF LOCOMOTIVES BY CLASSES

CLASSES	1935				1936				1937				1938				1939				1940			
	Mar.	June	Sept.	Dec.	Mar.	June	Sept.	Dec.	Mar.	June	Sept.	Dec.	Mar.	June	Sept.	Dec.	Mar.	June	Sept.	Dec.	Mar.	June	Sept.	Dec.
G-6J		8																						
G-6M		17																						
G-6O		12																						
G-6P		4																						
G-6T		12																						
G-6U		3																						
Total Class G-6		56																						
H-7A		10																						
H-7B		15																						
H-7C		25																						
H-7D		10																						
H-7E		10																						
Total Class H-7		70																						

M.C.R.R.

RECAPITULATION OF LOCOMOTIVES BY CLASSES

CLASSES	1935				1936				1937				1938				1939				1940			
	Mar.	June	Sept.	Dec.	Mar.	June	Sept.	Dec.	Mar.	June	Sept.	Dec.	Mar.	June	Sept.	Dec.	Mar.	June	Sept.	Dec.	Mar.	June	Sept.	Dec.
H-10 A		12																						
H-10 B		49																						
Total Class H-10		61																						
Total Type "H"		131																						
J-1 B		10																						
J-1 C		5																						
J-1 D		15																						
Total Class J-1		30																						

RECAPITULATION OF LOCOMOTIVES BY CLASSES

CLASSES	1935				1936				1937				1938				1939				1940			
	Mar.	June	Sept.	Dec.	Mar.	June	Sept.	Dec.	Mar.	June	Sept.	Dec.	Mar.	June	Sept.	Dec.	Mar.	June	Sept.	Dec.	Mar.	June	Sept.	Dec.
K-3F		6				3				2														
K-3H		7								5														
K-3I		4								4														
K-3M		10								10														
K-3P		13						15		13														
K-3Q		9								11														
Total Class K-3		49			51	54		54		47														
M-1A		1								1														
M-1D		1								1														
M-1E		1								1														
M-1F		1								1														
Total Class M-1		4								4														
R-1		6								6														
R-1A		4								4														
R-1B		2								2														

M.C.R.R.

RECAPITULATION OF LOCOMOTIVES BY CLASSES

CLASSES	1935				1936				1937				1938				1939				1940			
	Mar.	June	Sept.	Dec.	Mar.	June	Sept.	Dec.	Mar.	June	Sept.	Dec.	Mar.	June	Sept.	Dec.	Mar.	June	Sept.	Dec.	Mar.	June	Sept.	Dec.
Total Class R-1		12								12														
U2A				3		5				5														
U-2 C		10								10														
U-2 E		20								20														
U-2 G		10								10														
U2 B						3				3														
Total Class U-2D		40			43	48				1														
" " U-2										49														
U-3 A		10								10														
U-3 B		6								6														
U-3 C		10								10														
U-3 E		10								10														
U-3 F		2								10														
U-3 H		10																						
Total Class U-3		48		46	46					46														
Total Type "U"		88		89		94				95														
Total all Classes		481	487			486	496			492														